RIGHT SIDE COMPARTMENTS CONTAIN THE FOLLOWING:

COMPARTMENT RS1 CONTAINS:
- (1) FLOOR MOUNTED TRAY
-
-

COMPARTMENT RS2 CONTAINS:
- (1) STD DEPTH ADJ SLIDE OUT/TILT TRAY
- (1) VERTICAL COMPARTMENT DIVIDER
- (1) CIRCUIT BREAKER PANEL
- (1) GENERATOR METER PANEL
- (1) SUB FEED BOX
-
-

COMPARTMENT RS3 CONTAINS:
- (1) 2-WAY ADJ SLIDE OUT TRAY
- (1) 1/2 DEPTH ADJ SLIDE OUT/TILT TRAY
- (1) FLOOR MOUNTED TRAY
-
-
-

COMPARTMENT RS4 CONTAINS:
- (1) CAB LIFT CONTROLLER
- (1) 2-WAY ADJ SLIDE OUT TRAY
- (1) 1/2 DEPTH ADJ SLIDE OUT/TILT TRAY
- (1) FLOOR MOUNTED TRAY
- (2) ELECTRIC CORD REEL WITH 200' OF 10/3 YELLOW CORD EACH
-
-
-

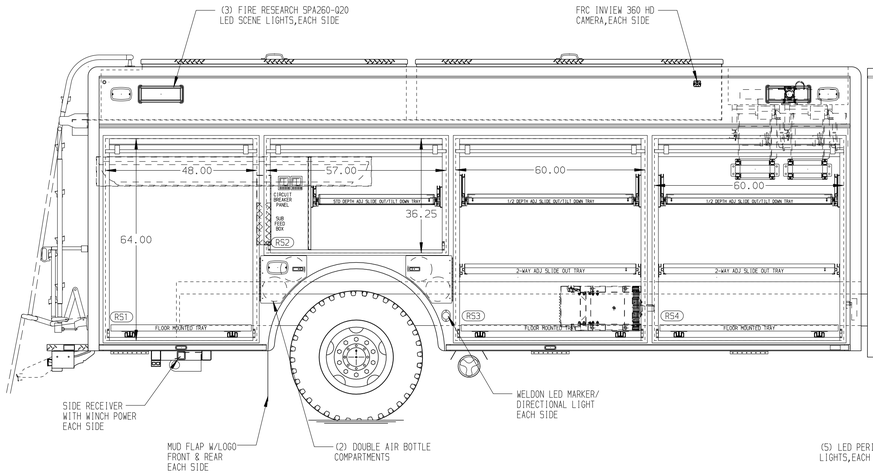

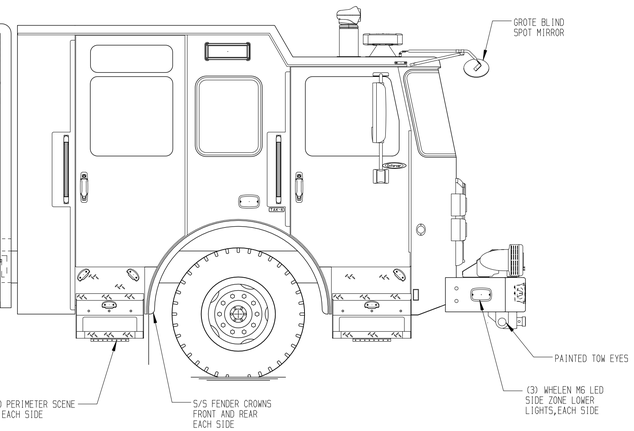

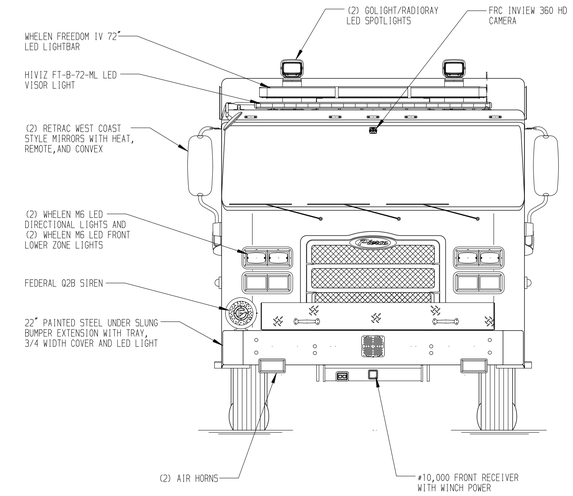

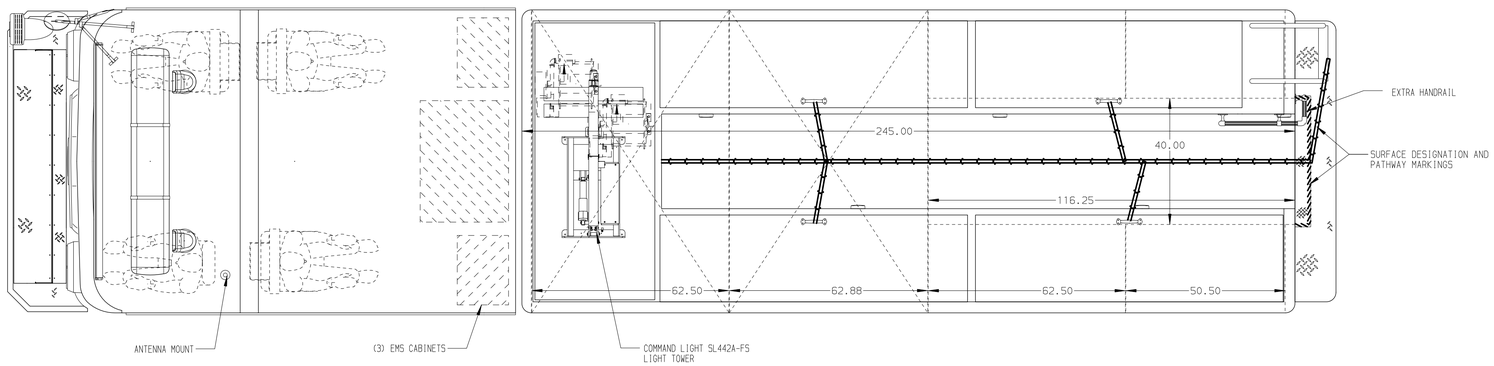

REAR COMPARTMENT CONTAINS THE FOLLOWING:

COMPARTMENT B1 CONTAINS:
- (1) STOKES BASKET RACK
- (1) 110"DP ADJ SLIDE OUT TRAY
- (1) FLOOR MOUNTED TRAY
-
-
-
-

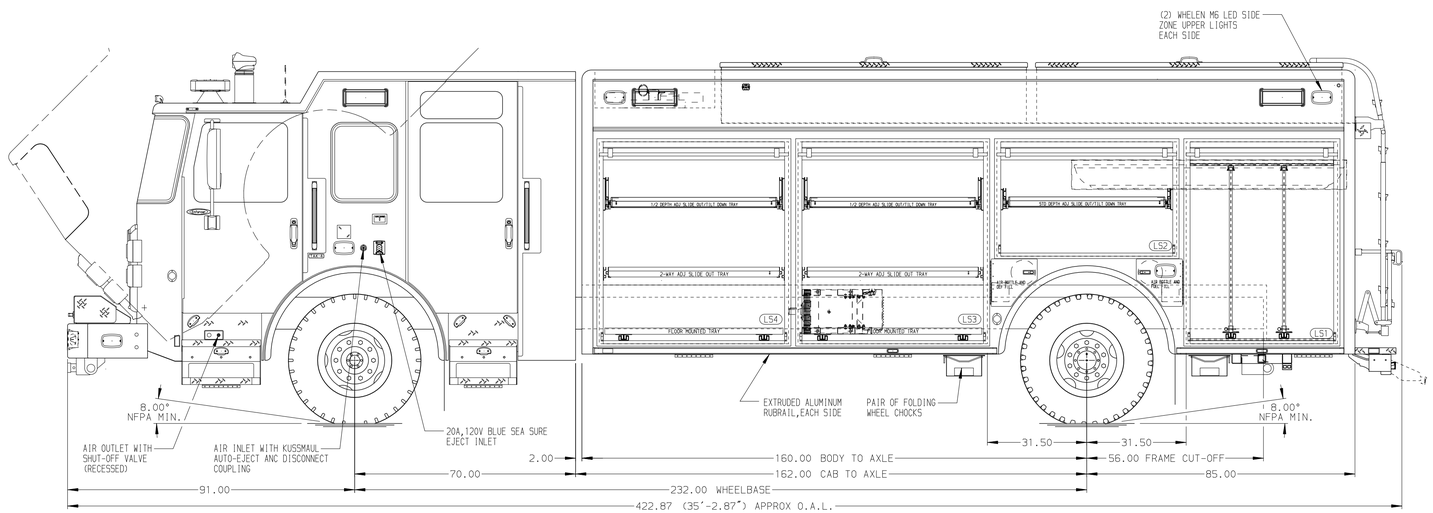

LEFT SIDE COMPARTMENTS CONTAIN THE FOLLOWING:

COMPARTMENT LS1 CONTAINS:
- (2) STD DEPTH ADJ SLIDE OUT TOOLBOARDS
-
-
-

COMPARTMENT LS2 CONTAINS:
- (1) STD DEPTH ADJ SLIDE OUT/TILT TRAY
-
-
-

COMPARTMENT LS3 CONTAINS:
- (1) 2-WAY ADJ SLIDE OUT TRAY
- (1) 1/2 DEPTH ADJ SLIDE OUT/TILT TRAY
- (1) FLOOR MOUNTED TRAY
-
-
-
-
-

COMPARTMENT LS4 CONTAINS:
- (1) 2-WAY ADJ SLIDE OUT TRAY
- (1) 1/2 DEPTH ADJ SLIDE OUT/TILT TRAY
- (1) FLOOR MOUNTED TRAY
- (1) COMMAND LIGHT CONTROLLER
-
-
-

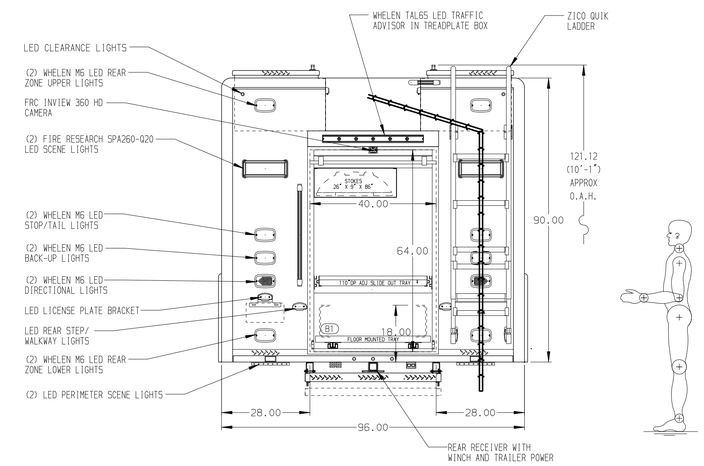

NOTE

DIMENSIONS SHOWN ARE APPROXIMATE AND ARE SUBJECT TO MINOR DEVIATIONS AS MAY OCCUR OR BE NECESSARY IN CONSTRUCTION.
MINOR DETAILS NOT SHOWN.

NOTES:
1. ONSPOT AUTOMATIC TIRE CHAINS
2. WARN #10,000 PORTABLE RECEIVER STYLE WINCH
3. BRUSHED S/S SCUFFPLATES ON CAB AND CREW CAB DOOR JAMB AND BEHIND HANDRAILS
4. FLOOR IN CAB AND CREW CAB TO BE PADDED RUBBER
5. DAVID CLARK INTERCOM SYSTEM
6. IOTA 75 AMP BATTERY CHARGER WITH INDICATOR LOCATED BEHIND THE DRIVER'S SEAT
7. S/S GUARDS ON ALL BODY ROLL-UP DOORS
8. PULL STRAPS ON ALL BODY ROLL-UP DOORS
9. PIERCE LED LIGHT STRIPS IN ALL BODY AND HATCH COMPARTMENTS
10. TURTLE TILE MATTING IN HATCH COMPARTMENTS
11. ONAN 25kW SINGLE PHASE PTO DRIVEN GENERATOR WITH SPLASH GUARD LOCATED BETWEEN THE FRAME RAILS

SIDE ROLL AND FRONTAL IMPACT PROTECTION

CLEAR DOOR WIDTH KEY	
AMDOR ROLL UP DOORS:	-2 1/4"
GORTITE ROLL UP DOORS:	-2 1/2"
PIERCE DOUBLE LAP DOORS:	-4 1/4"
PIERCE LIFT-UP LAP DOORS:	-1 1/2"
(EX: 60"F-F - 2 1/4"= 57 3/4" CLEAR) (F-F)= FRAME TO FRAME	

REV	DATE	BY	CH