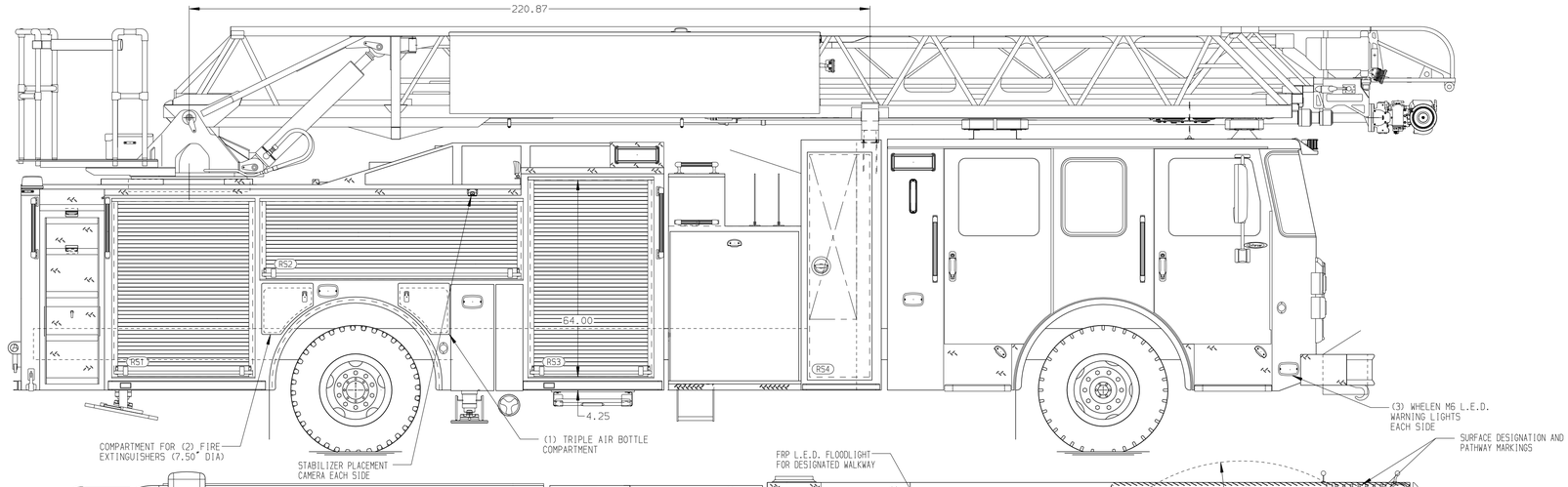

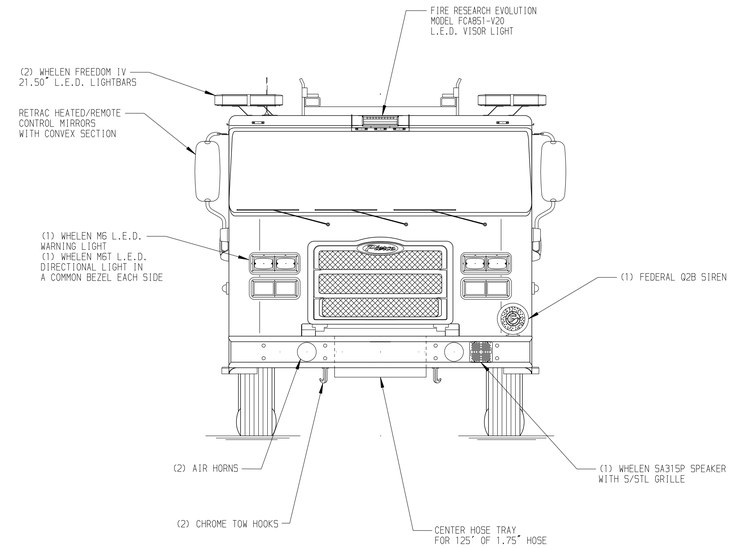

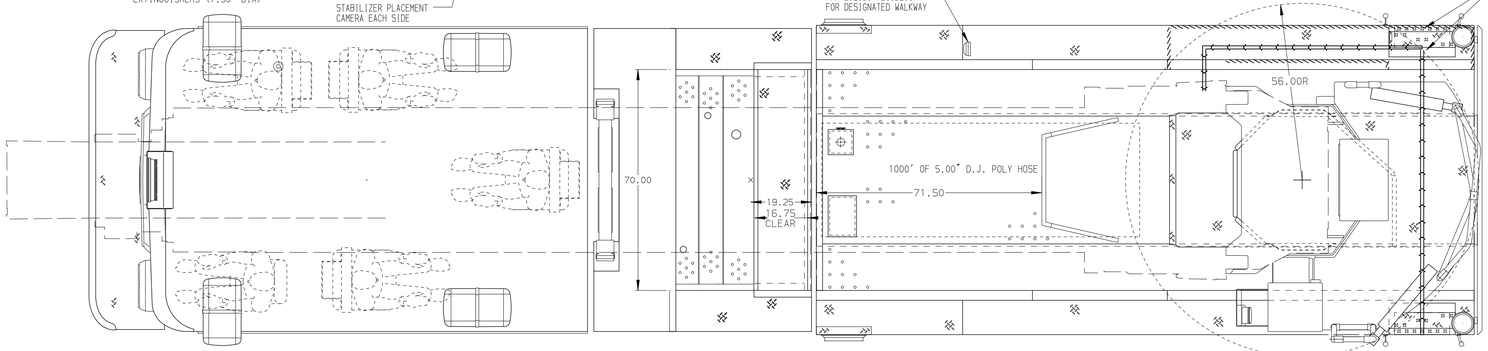

BODY	WATER TANK
107' ASL Aluminum Body	500 Gallon Poly Water Tank
COMPT,LEFT SIDE FRONT	Foam System
Full Height Rollup Forward	Foam Pro 1600 Foam System
COMPT,LEFT SIDE REAR	Foam Cell
Full Height Rollup Rearward	20 Gallon Foam Cell, Non-Reduced Water
COMPT,RIGHT SIDE FRONT	
Full Height Rollup Forward	
COMPT,RIGHT SIDE REAR	
Full Height Rollup Rearward	

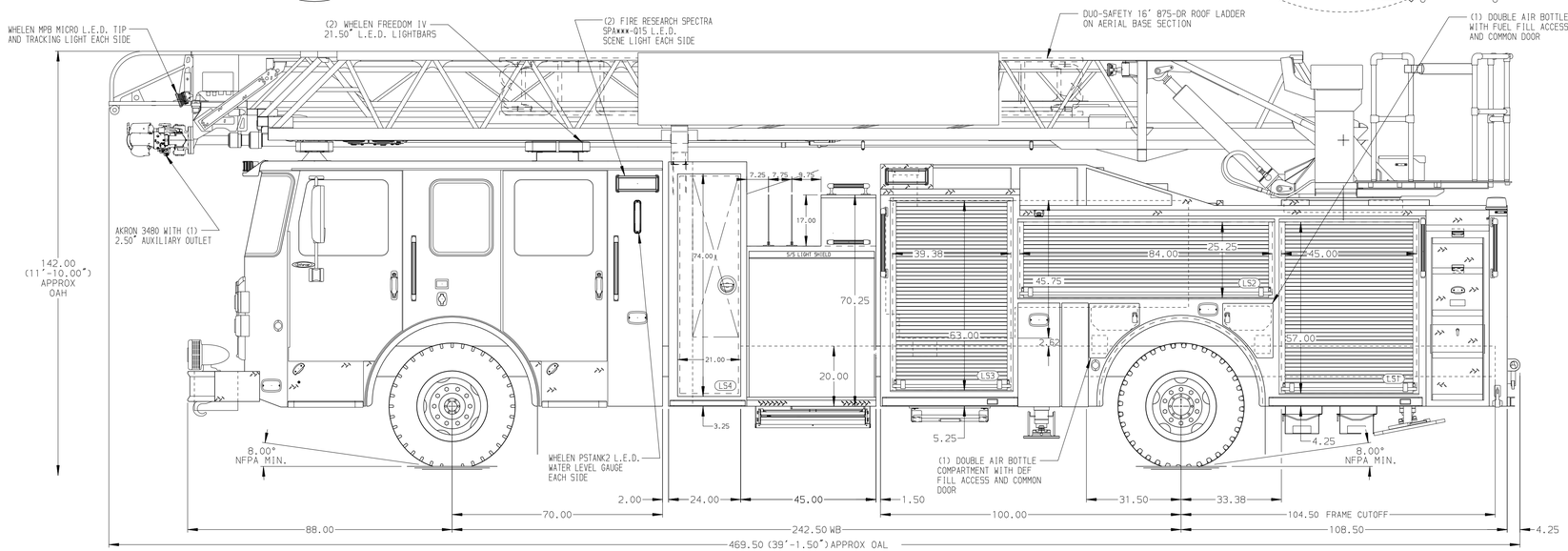

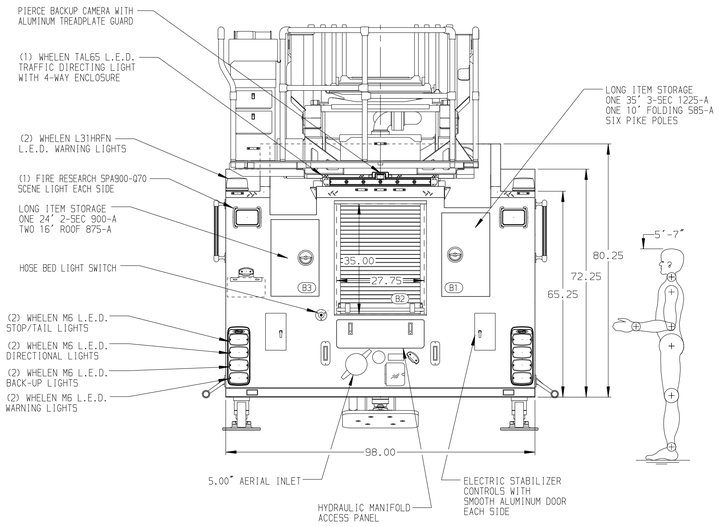

CHASSIS	CAB	AXLE,FRONT,CUSTOM	TRANSMISSION	PUMPHOUSE	CROSSLAYS,1.50"	SPEEDLAYS	SAFETY
Enforcer Chassis	7000 Enforcer Cab	20,000 lb Dana Axle	ALLison 5th Gen, 3000 EVS P	45" Control Zone Side Mount	(2) 1.50" Standard Capacity	Speedlays Not Required	-
ENGINE	BUMPER	AXLE,REAR		PUMP	CROSSLAYS,2.50"	GENERATOR	
450 HP Cummins L9 Engine	19" Extended Stainless Steel	33,500 Lb Meritor Axle		2000 GPM Waterous CSU	(1) 2.50" Standard Capacity	Generator Not Required	

CUSTOMER APPROVAL

APPROVED BY:_____

DATE:_____

Pierce MANUFACTURING INC.

NOTE

DIMENSIONS SHOWN ARE APPROXIMATE AND ARE SUBJECT TO MINOR DEVIATIONS AS MAY OCCUR OR BE NECESSARY IN CONSTRUCTION.
MINOR DETAILS NOT SHOWN.

1. ONE 1.50 OUTLET WITH 2.00 PIPING AND SWIVEL LOCATED IN CENTER BUMPER TRAY
2. SHORELINE RECEPTACLE WITH KUSSMAUL SUPER AUTO-EJECT LOCATED ON DRIVER SIDE OF THE CAB
3. AIR INLET WITH DISCONNECT COUPLING IN THE DRIVER SIDE STEPWELL
4. BATTERY CHARGER LOCATED IN COMPARTMENT PER ORDER
5. BATTERY CHARGE INDICATOR LOCATED ON THE DRIVER SIDE REAR OF CAB DOOR
6. FOUR ADJUSTABLE SHELVES LOCATED IN COMPARTMENTS PER ORDER
7. THREE FLOOR MOUNTED SLIDE-OUT TRAYS LOCATED IN COMPARTMENTS PER ORDER
8. NON-RAISED AERIAL PEDESTAL
9. LIFTING EYE ROPE RESCUE ATTACHMENT AT AERIAL TIP
10. 1500 GPM HIGH FLOW WATERWAY
11. ONE SWING-OUT ALUMINUM TOOLBOARD IN COMPARTMENT PER ORDER
12. ONE TOOL DRAWER CABINET PER ORDER
13. ONE ALUMINUM MOUNTING PLATE IN COMPARTMENT PER ORDER

REV	DATE	BY	CH
▽	-	-	-

CHASSIS DATA — MAKE: PIERCE — MODEL: ENFORCER

TITLE: 107' ASCENDANT AERIAL LADDER AND BODY ASSEMBLY
-

FOR: BAY COUNTY BOARD OF COUNTY COMMISSIONERS
PANAMA CITY, FL

DWG NO.: 37976AD

JOB NO.	SCALE	DRAWN BY	CHECKED BY	SHEET SIZE	SHEET NO.
37976	1:24	ANZ	NDA	D	1 OF 1

DATE: 03MAY22 — 05MAY22

View File Created 05-MAY-2022 11:45:32