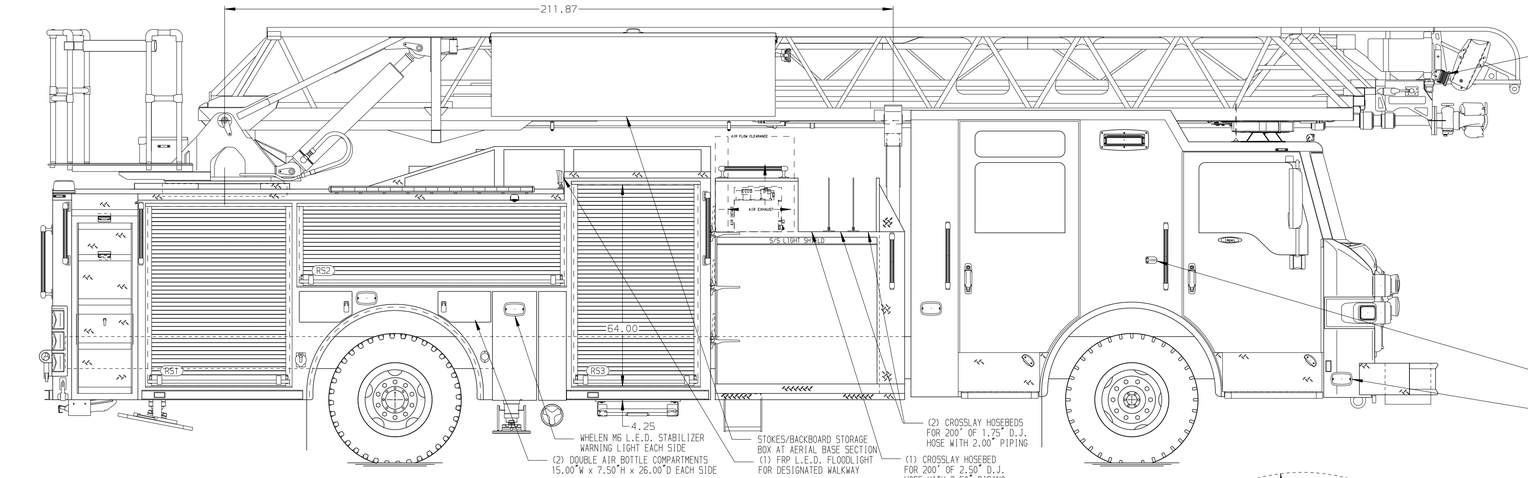

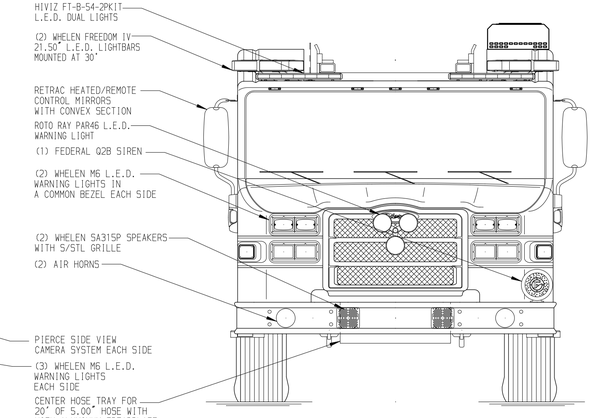

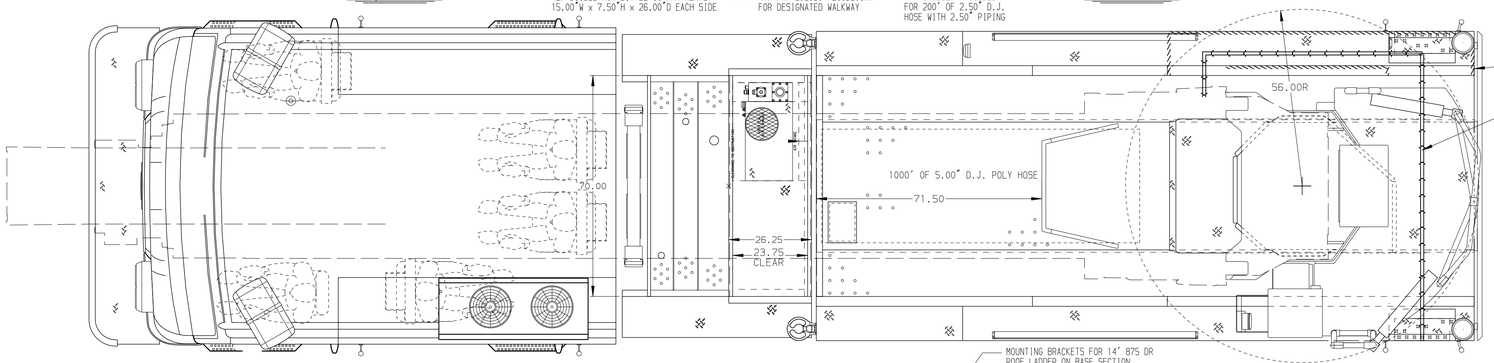

BODY	WATER TANK
107' ASL Aluminum Body	500 Gallon Poly Water Tank
COMPT,LEFT SIDE FRONT	Foam System
Full Height Rollup Forward	Foam System Not Required
COMPT,LEFT SIDE REAR	Foam Cell
Full Height Rollup Rearward	Foam Cell Not Required
COMPT,RIGHT SIDE FRONT	
Full Height Rollup Forward	
COMPT,RIGHT SIDE REAR	
Full Height Rollup Rearward	

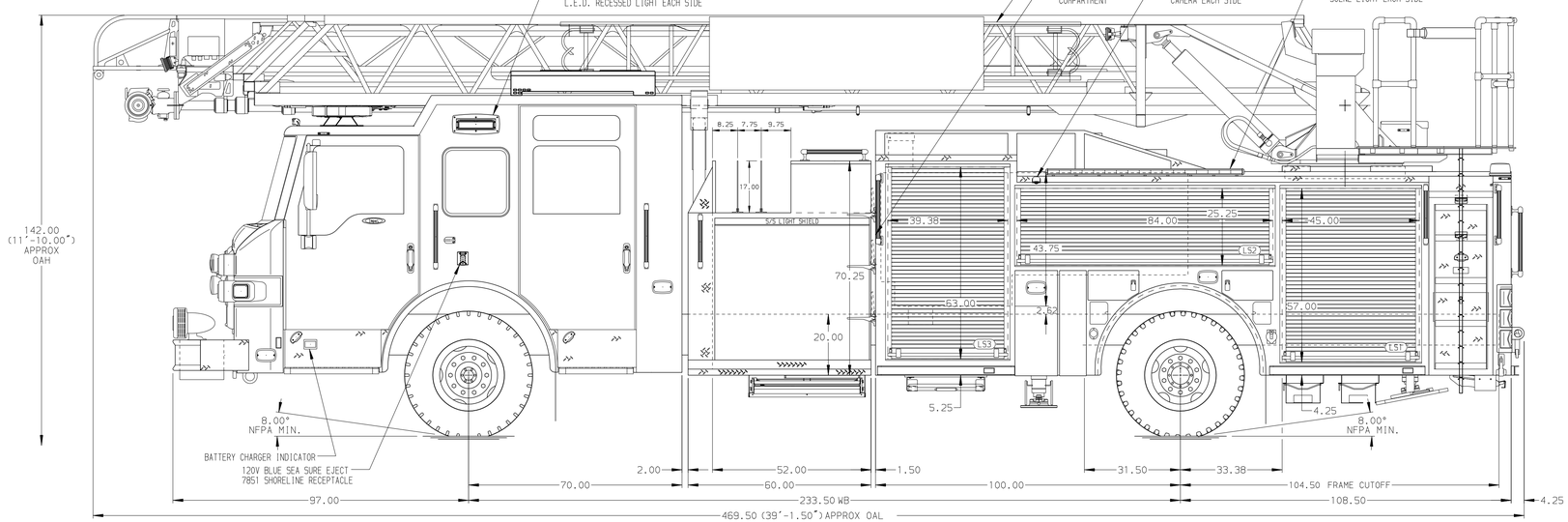

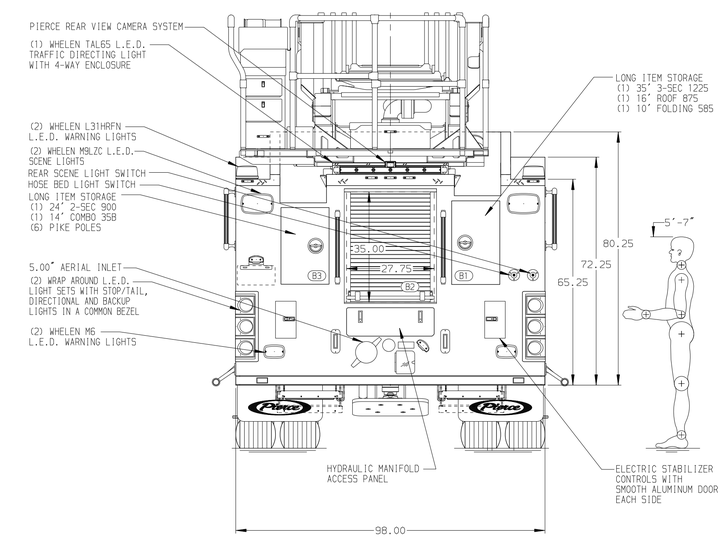

CHASSIS	CAB	AXLE,FRONT,CUSTOM	TRANSMISSION	PUMPHOUSE	CROSSLAYS,1.50"	SPEEDLAYS	-
Impel Chassis	7010 Impel Cab	19,500 Lb Meritor Axle	ALLison 5th Gen, 3000 EVS P	52" Control Zone Side Mount	(2) 1.50" Standard Capacity	Speedlays Not Required	-
ENGINE	BUMPER	AXLE,REAR		PUMP	CROSSLAYS,2.50"	GENERATOR	-
450 HP Cummins L9 Engine	19" Extended Stainless Steel	33,500 Lb Meritor Axle		1500 GPM Waterous CSU	(1) 2.50" Standard Capacity	Harrison 3.6 MSV Hydraulic	

CUSTOMER APPROVAL

APPROVED BY:_____

DATE:_____

Pierce MANUFACTURING INC.

NOTE

DIMENSIONS SHOWN ARE APPROXIMATE AND ARE SUBJECT TO MINOR DEVIATIONS AS MAY OCCUR OR BE NECESSARY IN CONSTRUCTION.
MINOR DETAILS NOT SHOWN.

1. BATTERY CHARGER LOCATED BEHIND DRIVER'S SEAT
2. L.E.D. LIGHT STRIPS LOCATED IN HOSE BED PER ORDER
3. EIGHT ADJUSTABLE FULL WIDTH/FULL DEPTH SHELVES IN COMPARTMENT PER ORDER
4. THREE FLOOR MOUNTED SLIDE-OUT TRAYS IN COMPARTMENT PER ORDER
5. ONE SWING-OUT ALUMINUM TOOL BOARD IN COMPARTMENT PER ORDER
6. ALUMINUM PEGBOARD ON BACK WALLS OF COMPARTMENT PER ORDER
7. CIRCUIT BREAKER PANEL IN COMPARTMENT PER ORDER
8. ONE HANNAY ELECTRIC REWIND CORD REEL LOCATED PER ORDER
9. AIR INLET/OUTLET WITH DISCONNECT FITTING LOCATED ON DRIVERS SIDE PUMP PANEL PER ORDER
10. TRIDENT FOLDING STEPS ON AERIAL DEVICE
11. L.E.D. LIGHTING ON AERIAL LADDER SECTIONS
12. 2-WAY INTERCOM SYSTEM BETWEEN AERIAL TIP OR PLATFORM AND TURNTABLE
13. WIRELESS CAMERA LOCATED AT AERIAL EGRESS
14. LIFTING EYE ROPE RESCUE ATTACHMENT AT AERIAL TIP
15. AIR HORN CONTROL AT AERIAL TURNTABLE
16. 1500 GPM HIGH FLOW WATERWAY
17. ONE 120V RECEPTACLE IN CAB PER ORDER
18. TWO 120V RECEPTACLES IN COMPARTMENT PER ORDER
19. AERIAL LIMITED RETRACTION NOT REQUIRED

REV	DATE	BY	CH
▽	-	-	-

CHASSIS DATA	
MAKE	PIERCE
MODEL	IMPEL
TITLE	107' ASCENDANT AERIAL LADDER AND BODY ASSEMBLY –
FOR	LAFAYETTE FIRE DEPARTMENT LAFAYETTE, LA
DWG NO.	38026AD
JOB NO.	38026
SCALE	1:24
DATE	
DRAWN BY	JGA 17MAY22
CHECKED BY	ZCH 19MAY22
SHEET SIZE	D
SHEET NO.	1 OF 1

View File Created 19-MAY-2022 13:29:13