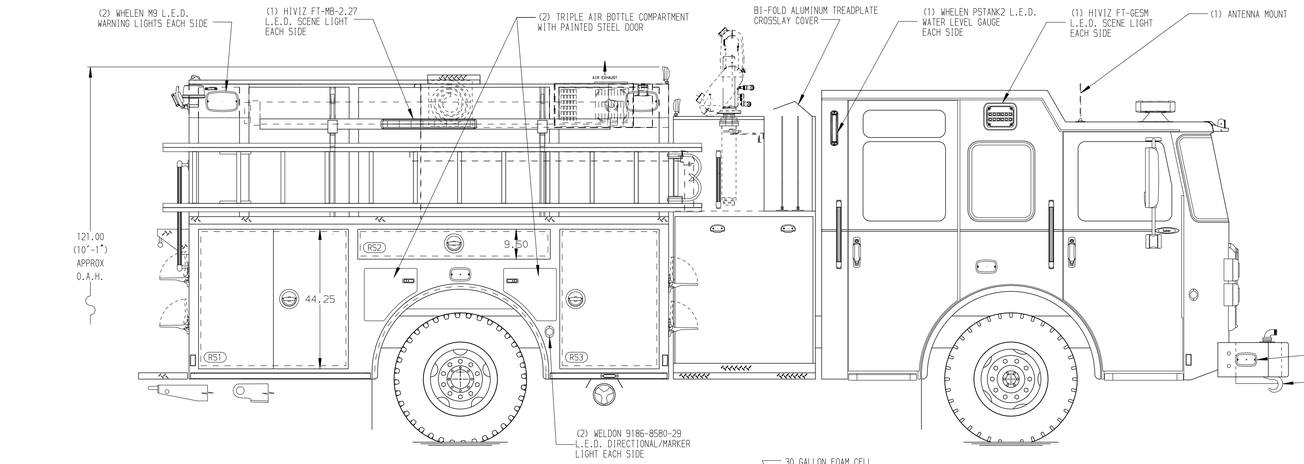

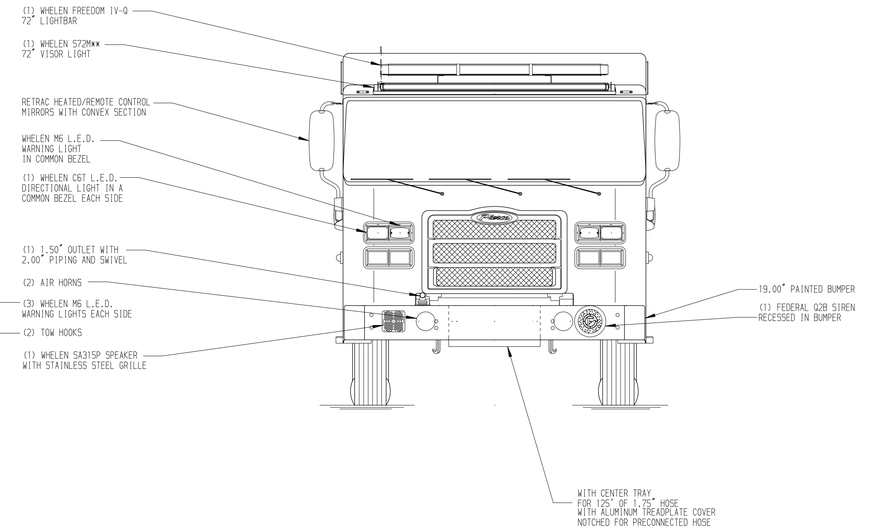

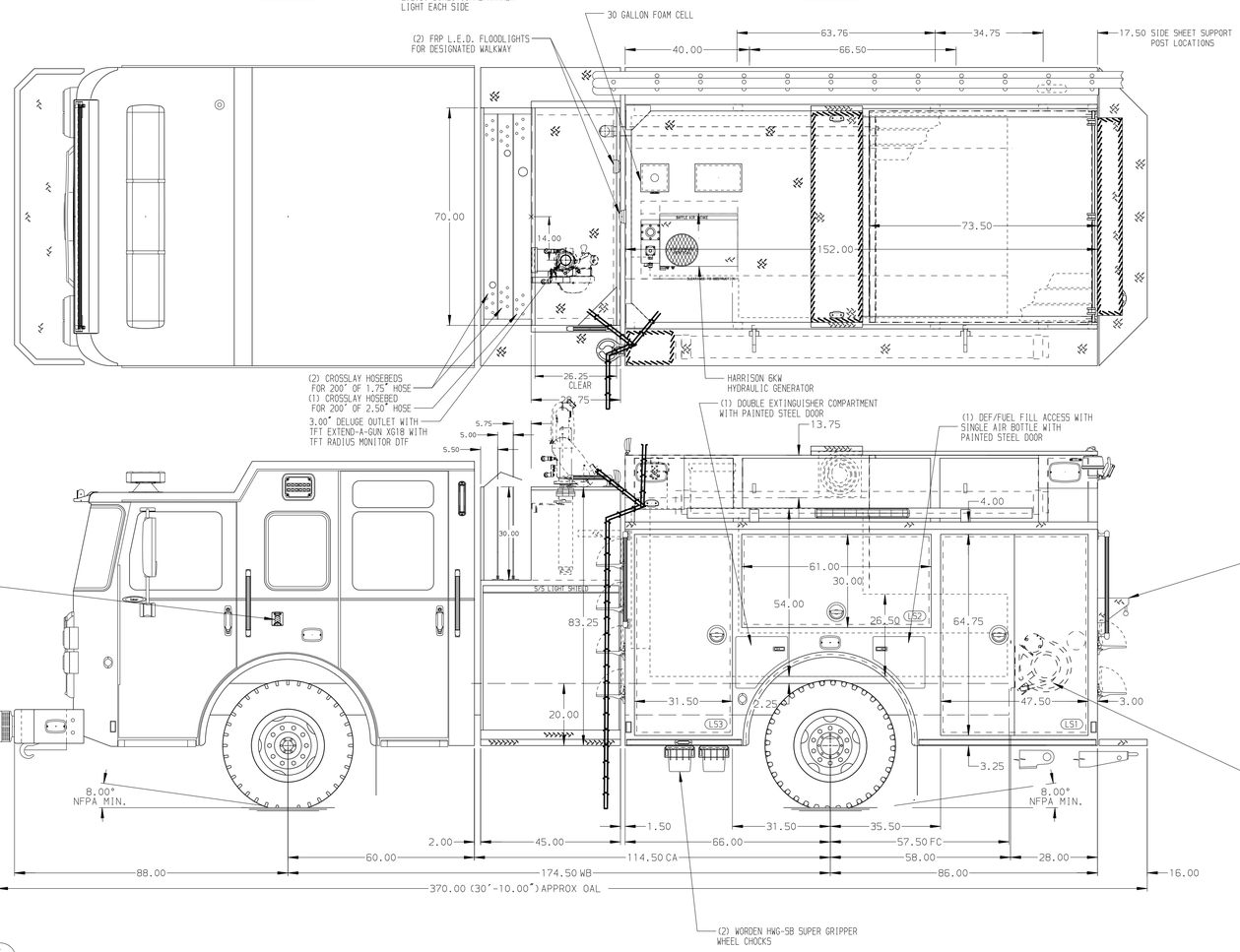

HOSEBED CAPACITIES

1 - 1000' OF 3.00" D.J. POLY HOSE
2 - 1000' OF 5.00" D.J. POLY HOSE
3 - 400' OF 2.50" D.J. POLY HOSE

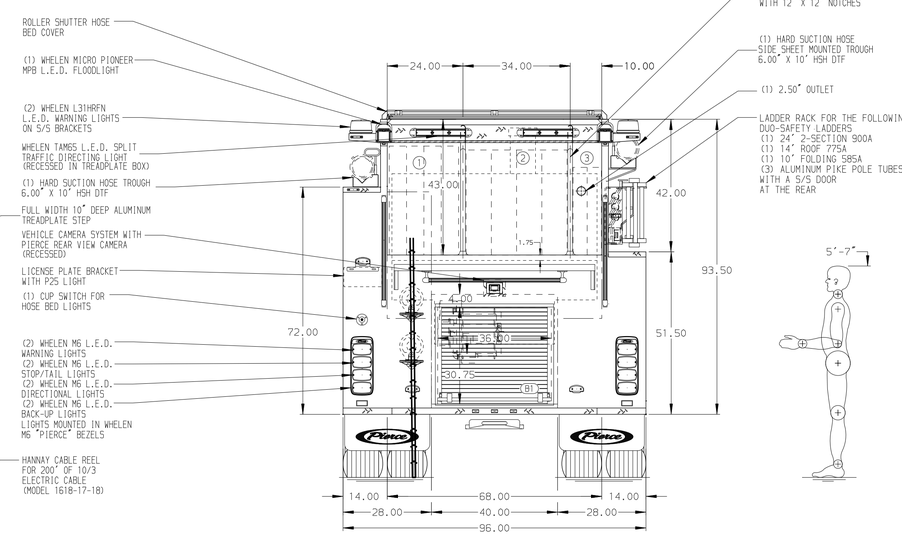

ALUMINUM BODY

NOTE

DIMENSIONS SHOWN ARE APPROXIMATE AND ARE SUBJECT TO MINOR DEVIATIONS AS MAY OCCUR OR BE NECESSARY IN CONSTRUCTION.
MINOR DETAILS NOT SHOWN.

CUSTOMER APPROVAL

APPROVED BY: _____

DATE: _____

REV	DATE	BY	CH
▽	-	-	-

CHASSIS DATA
MAKE: PIERCE
MODEL: SABER FR

Pierce MANUFACTURING INC.

TITLE: 1500-D-1000P, 970G WATER W/ 30 GAL FOAM CELL 152" BODY, LADDER BRKTS, (3) CROSSLAYS, GENERATOR

FOR: SOUTH BOSTON FIRE RESCUE SOUTH BOSTON, VIRGINIA

DWG NO.: 38062AD

JOB NO.	38062
SCALE	1:24
DATE	
DRAWN BY	BTH
	24JUN22
CHECKED BY	WKL
	28JUN22
SHEET SIZE	D
SHEET NO.	1 OF 1

View File Created 28-JUN-2022 14:18:10