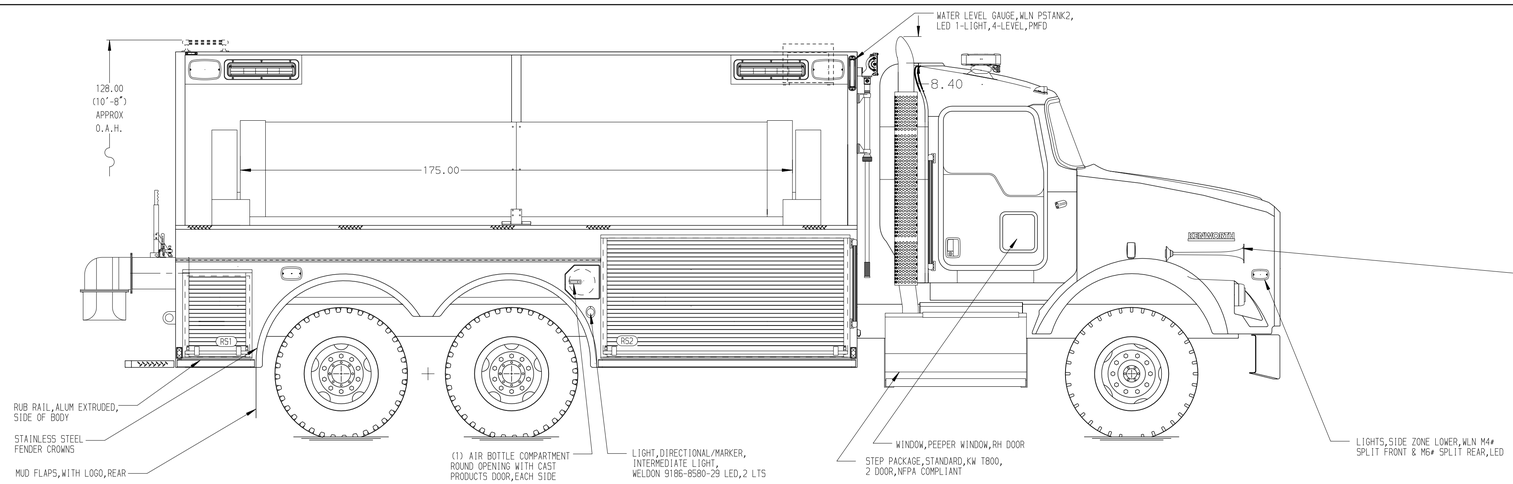

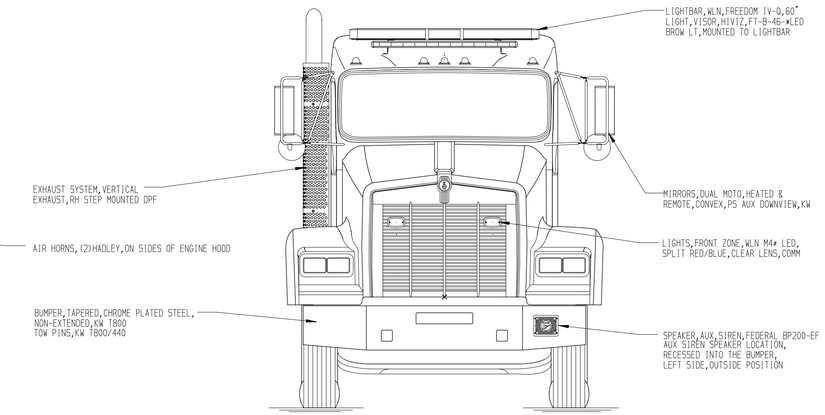

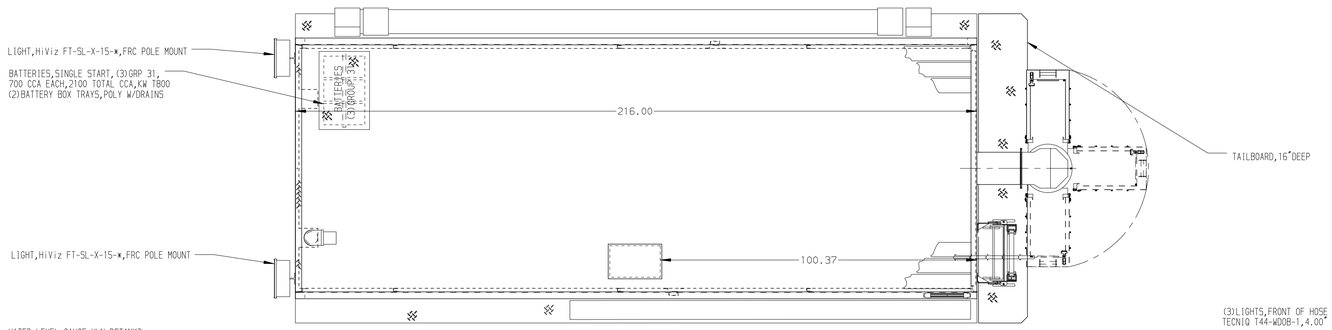

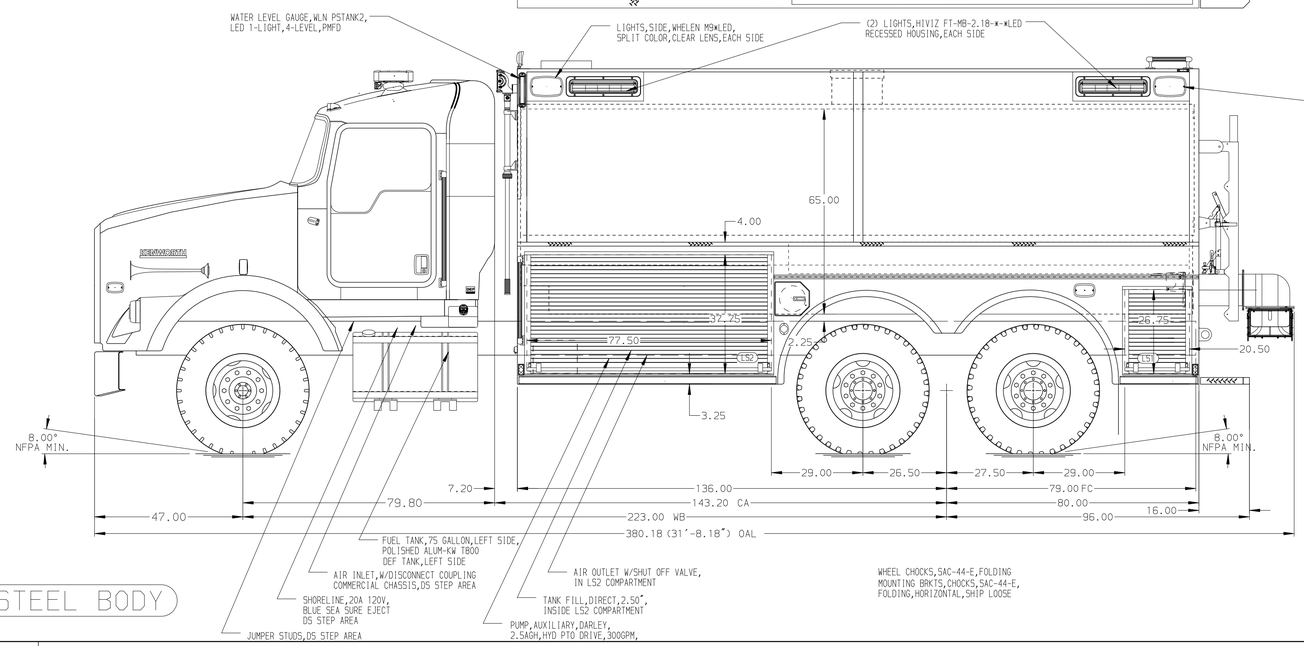

HOSEBED CAPACITIES

(1) 200' OF 2.50" D.J.POLY HOSE

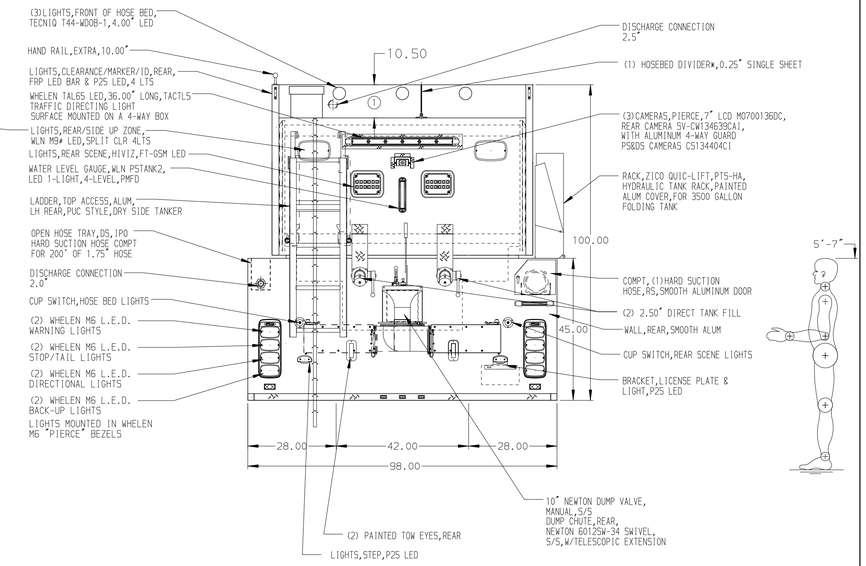

STAINLESS STEEL BODY

NOTE

DIMENSIONS SHOWN ARE APPROXIMATE AND ARE SUBJECT TO MINOR DEVIATIONS AS MAY OCCUR OR BE NECESSARY IN CONSTRUCTION.
MINOR DETAILS NOT SHOWN.

REV	DATE	BY	CH
▽	-	-	-

CHASSIS DATA	TITLE	300-D-3500 POLY,216"DRYSIDE BODY W/CATWALKS NO PUMP HOUSE	
MAKE KENWORTH	FOR	HUMBOLDT FIRE DEPARTMENT HUMBOLDT, IA	
MODEL T800	DWG NO.	38189AD	

Pierce MANUFACTURING INC.

JOB NO.	38189
SCALE 1:24	DATE
DRAWN BY RHU	13DEC22
CHECKED BY AJA	15DEC22
SHEET SIZE D	SHEET NO. 1 OF 1

View File Created 15-DEC-2022 12:58:33