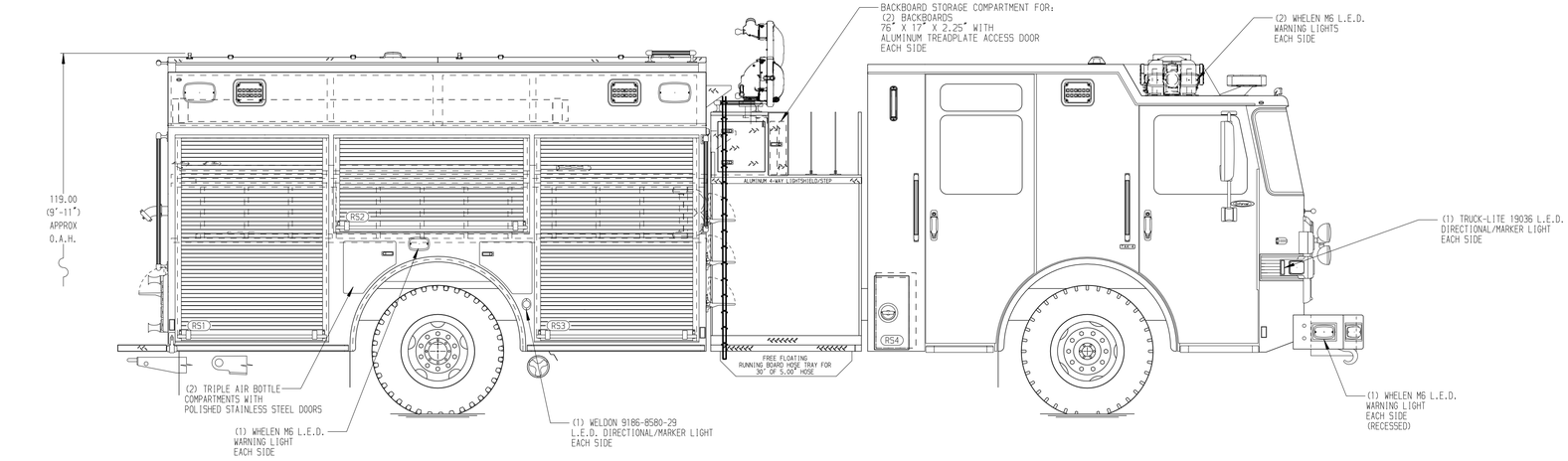

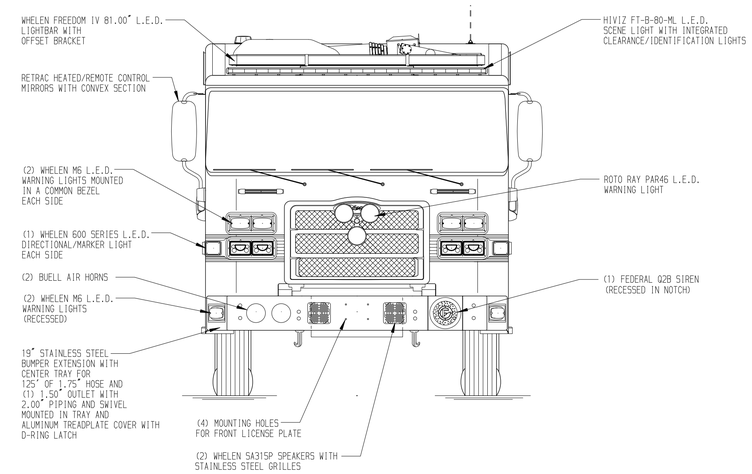

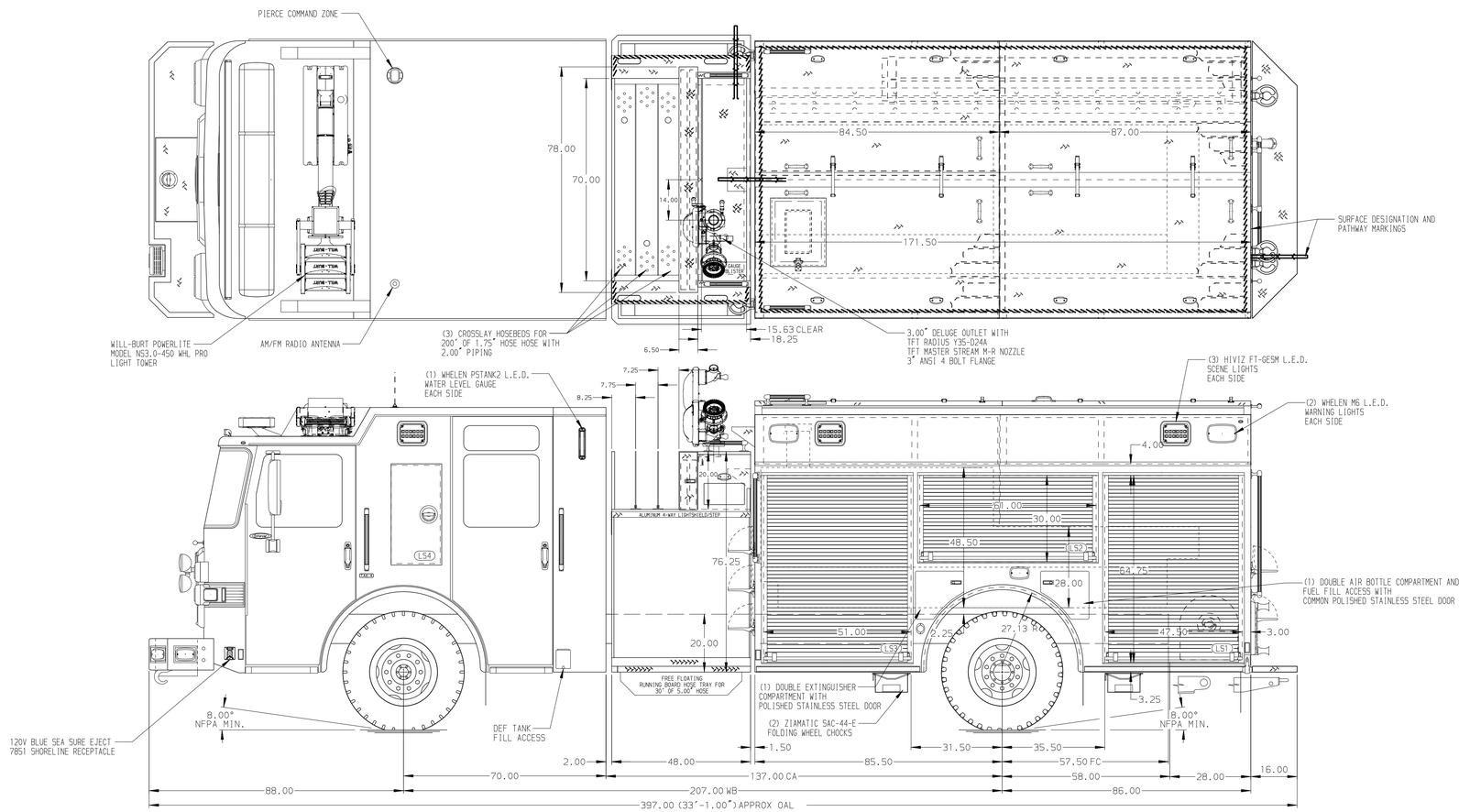

HOSEBED CAPACITIES

① - 1000' OF 5.00" DJP HOSE
② - 500' OF 2.50" DJP HOSE

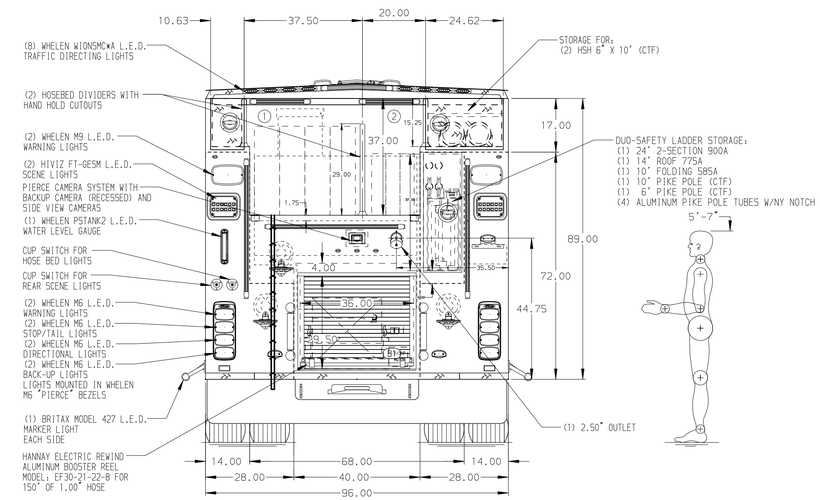

ALUMINUM BODY

SIDE ROLL AND FRONTAL IMPACT PROTECTION

NOTE

DIMENSIONS SHOWN ARE APPROXIMATE AND ARE SUBJECT TO MINOR DEVIATIONS AS MAY OCCUR OR BE NECESSARY IN CONSTRUCTION.
MINOR DETAILS NOT SHOWN.

1. AIR INLET/OUTLET WITH DISCONNECT FITTING IN A RECESSED ALUMINUM TREADPLATE BOX LOCATED IN DRIVER'S SIDE STEPWELL
2. BATTERY CHARGER MOUNTED BEHIND DRIVER'S SEAT PER ORDER
3. DUAL L.E.D. LIGHT STRIPS LOCATED IN HOSE BED
4. L.E.D. LIGHT STRIP LOCATED AT FRONT OF HOSE BED
5. DUAL L.E.D. LIGHT STRIPS LOCATED IN THE CARGO AREA PER ORDER

REV	DATE	BY	CH
7	02MAY24	SAM	CSH
6	01DEC23	SAM	CSH
5	25OCT23	SAM	CSH
4	21JUL23	SAM	WKL

CHASSIS DATA
MAKE: PIERCE
MODEL: ENFORCER

Pierce MANUFACTURING INC.

TITLE: 1500-D-1000P, 1000G WATER, 171" FH F&R FDLER
(3) CROSSLAYS, LADDERS BTWN TANK & SS, DELUGE

FOR: BRENHAM FIRE DEPARTMENT
BRENHAM, TEXAS

DWG NO. 38310AD-SH1

JOB NO.	38310
SCALE	1:24
DATE	
DRAWN BY	SAM
	13JUL23
CHECKED BY	EGO
	14JUL23
SHEET SIZE	D
SHEET NO.	1 OF 2

View File Created 03-MAY-2024 08:37:30