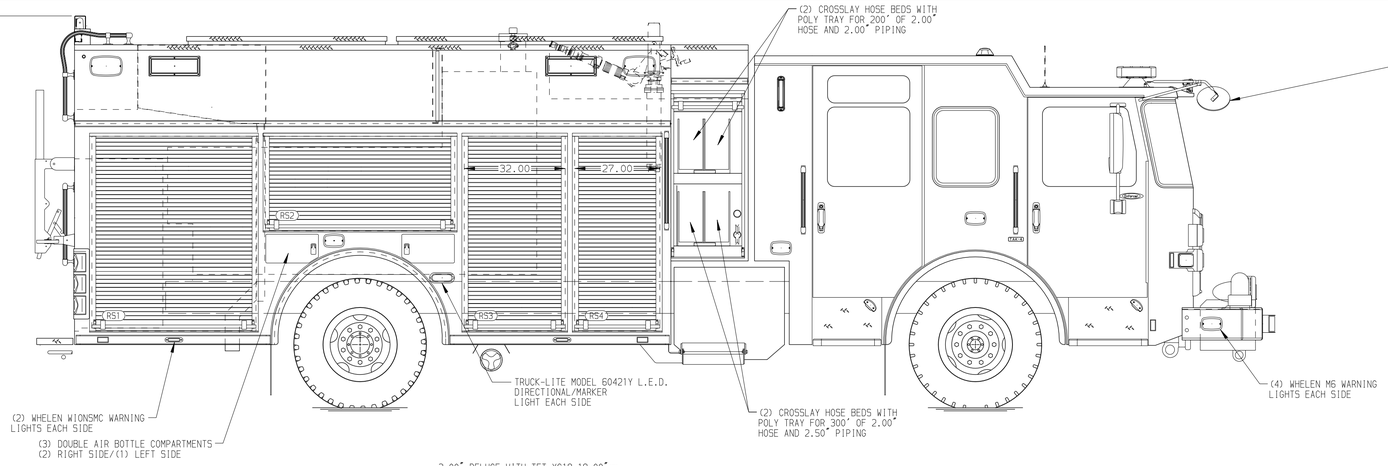

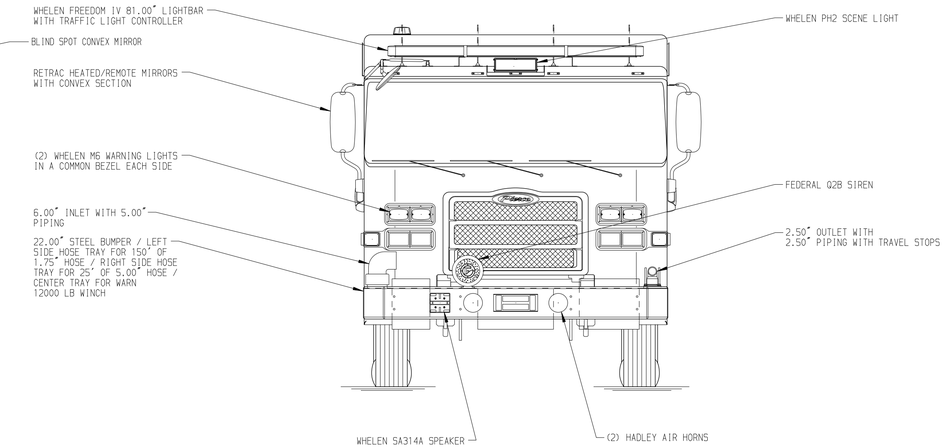

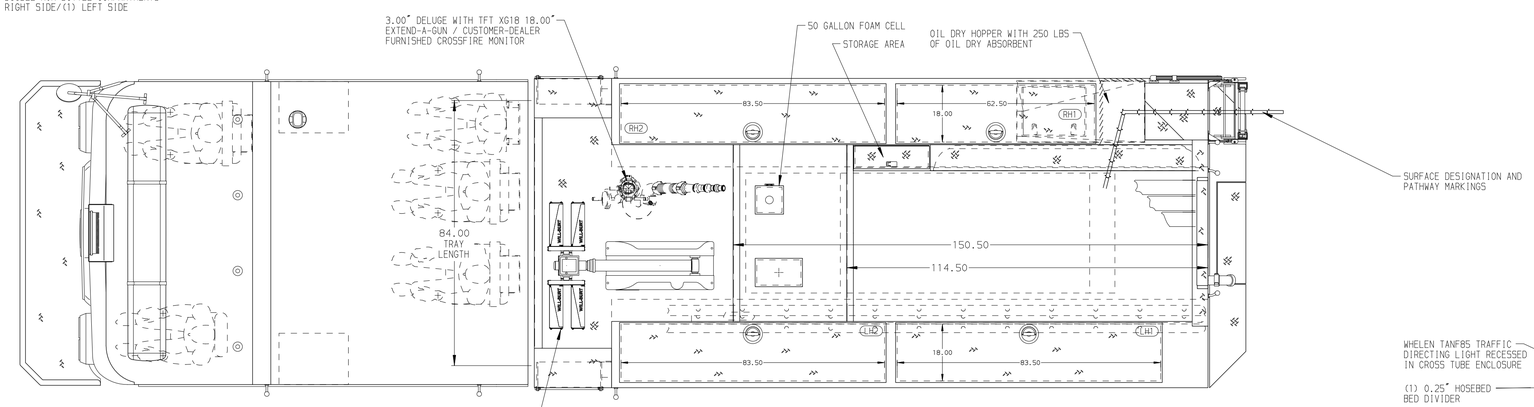

HOSEBED CAPACITIES
1. 600' OF 3.00" D.J. POLY HOSE
2. 1400' OF 4.00" D.J. POLY HOSE

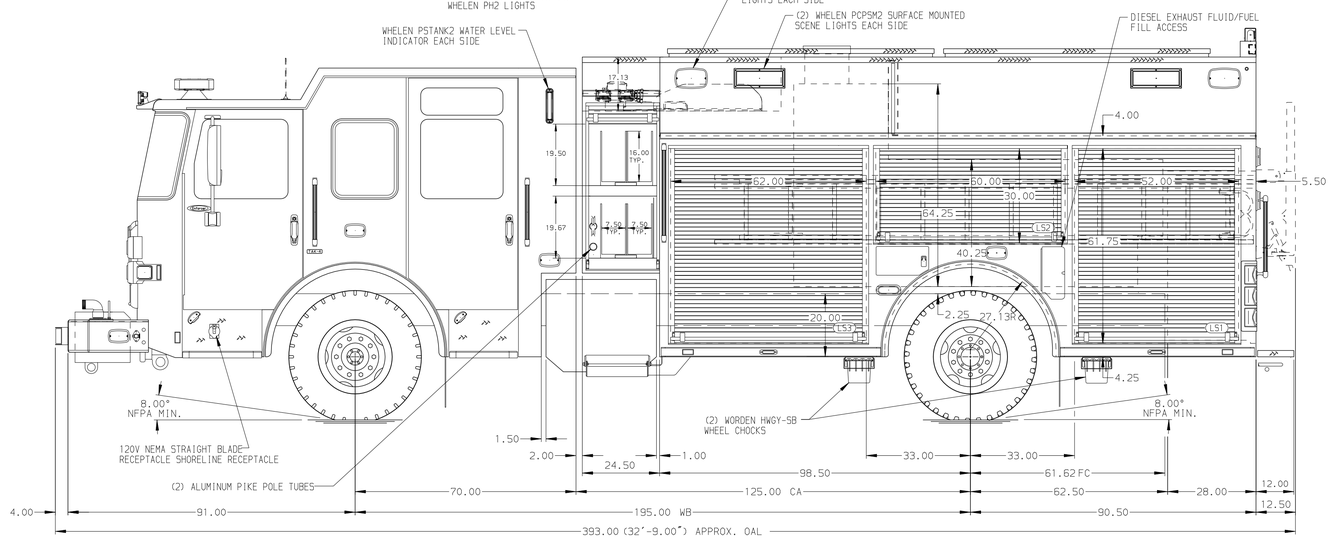

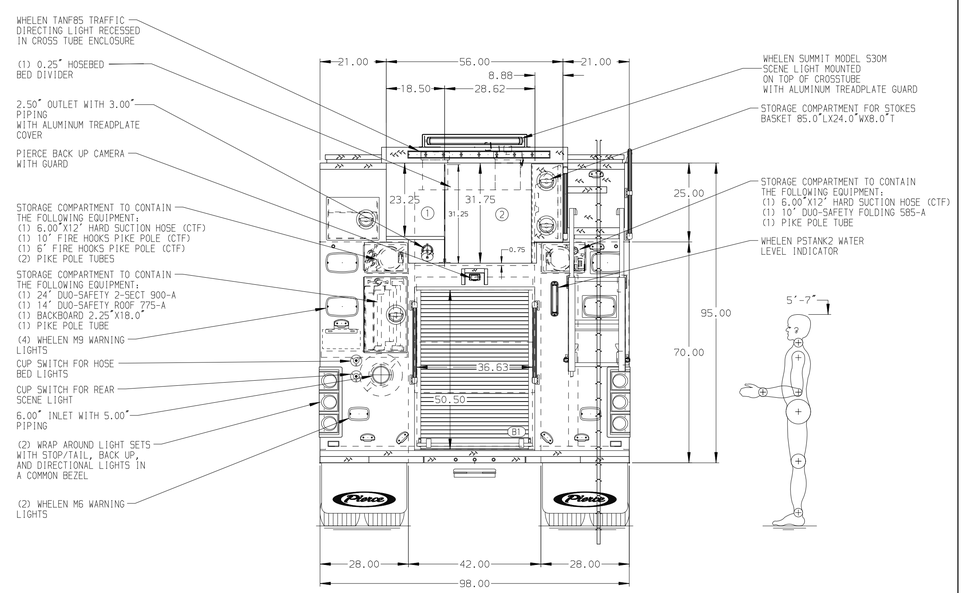

ALUMINUM BODY | MAXIMUM O.A.H. 130.00" | SIDE ROLL AND FRONTAL IMPACT PROTECTION

NOTE
DIMENSIONS SHOWN ARE APPROXIMATE AND ARE SUBJECT TO MINOR DEVIATIONS AS MAY OCCUR OR BE NECESSARY IN CONSTRUCTION.
MINOR DETAILS NOT SHOWN.

1. AIR INLET/OUTLET WITH DISCONNECT FITTING LOCATED ON LEFT SIDE PUMP PANEL
2. BATTERY CHARGER LOCATED BEHIND DRIVER SEAT
3. BATTERY CHARGER INDICATOR LOCATED ON DRIVER SIDE SEAT RISER

REV	DATE	BY	CH
4	04DEC24	BST	JJR
3	08JUL24	BST	KBO
2	16MAY24	LST	JBL
1	12APR24	BST	JBL

CHASSIS DATA
MAKE: PIERCE
MODEL: ENFORCER

Pierce MANUFACTURING INC.

TITLE: 1500GPM,750G TANK,700G WATER,50G FOAM 189" PUC RESCUE BODY,MUX
FOR: ALBEMARLE COUNTY,VA CHARLOTTESVILLE,VIRGINIA
DWG NO.: 38764AD-SH1

JOB NO.	38764 01-02
SCALE	1:24
DATE	
DRAWN BY	BST 05APR24
CHECKED BY	JBL 05APR24
SHEET SIZE	D
SHEET NO.	1 OF 2

View File Created 21-JAN-2025 14:59:14