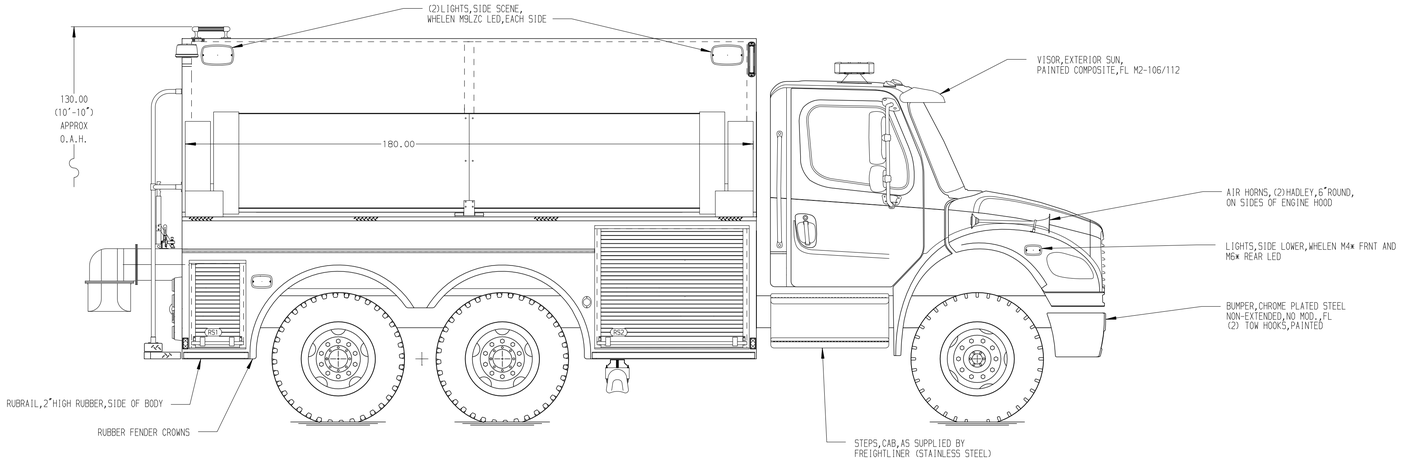

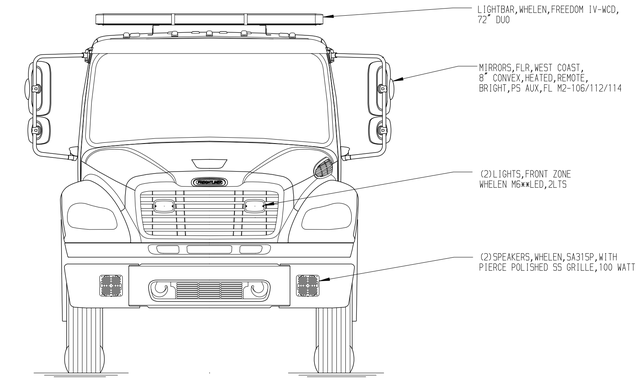

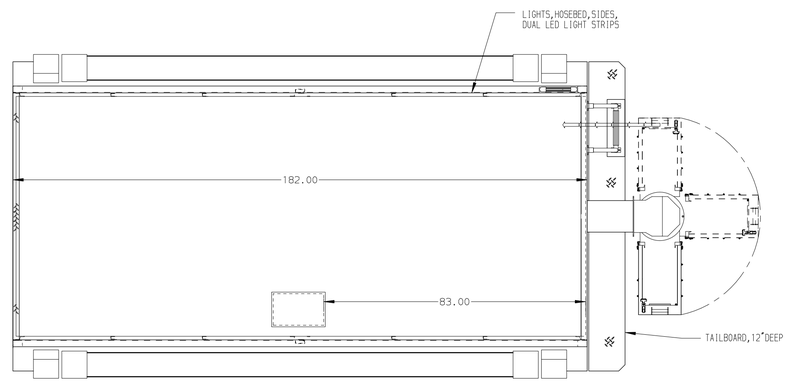

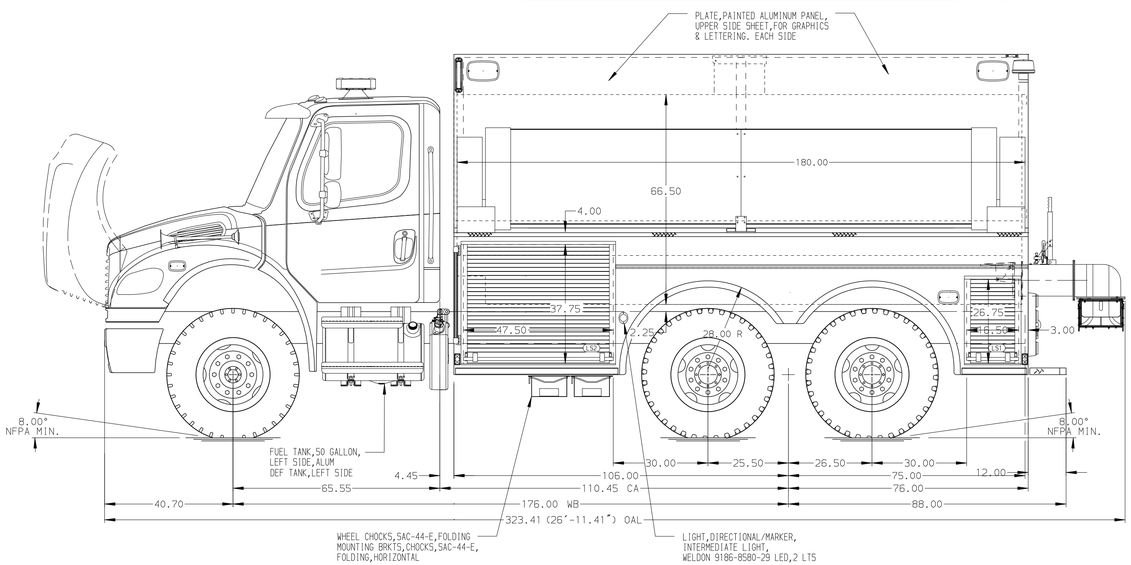

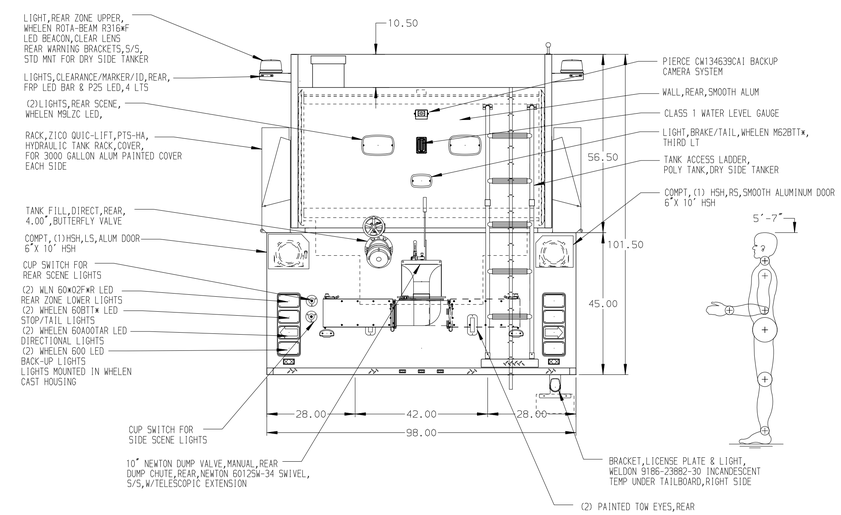

ALUMINUM BODY

NOTE

DIMENSIONS SHOWN ARE APPROXIMATE AND ARE SUBJECT TO MINOR DEVIATIONS AS MAY OCCUR OR BE NECESSARY IN CONSTRUCTION.
MINOR DETAILS NOT SHOWN.

REV	DATE	BY	CH
B	01SEP23	RWR	NAS
A	01AUG23	RHU	NAS

Pierce MANUFACTURING INC.

CHASSIS DATA	TITLE	3000P,182" DRYSIDE NO PUMPHOUSE	JOB NO. PRELIM
MAKE FL	FOR	FARMINGTON FIRE DEPT FARMINGTON, MINNESOTA	SCALE 1:24 / DATE
MODEL M2-106	DWG NO.	38790AD	DRAWN BY JLA / 23MAY23
			CHECKED BY AJA / 25MAY23
			SHEET SIZE D / SHEET NO. 1 OF 1

View File Created 01-SEP-2023 14:54:29