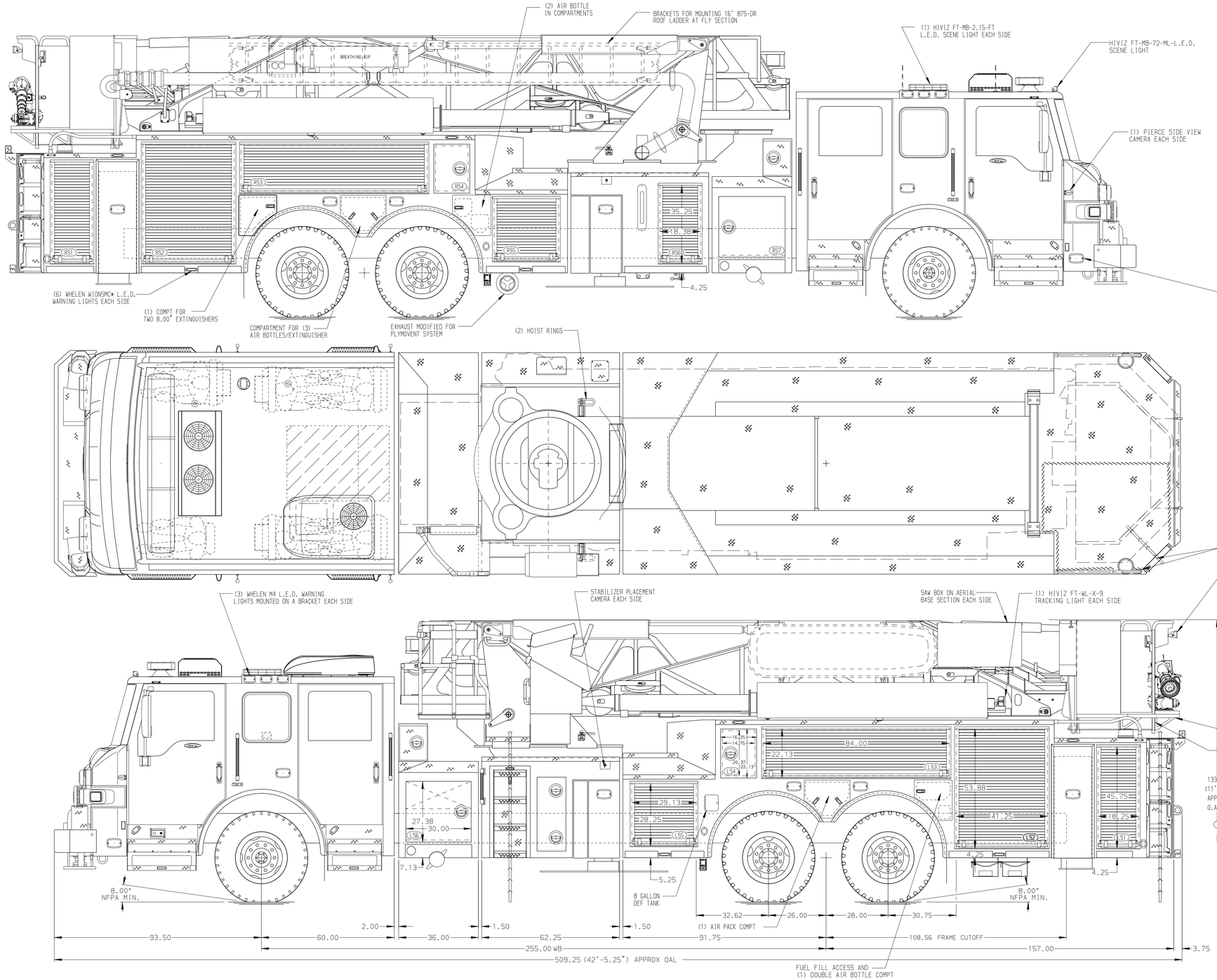

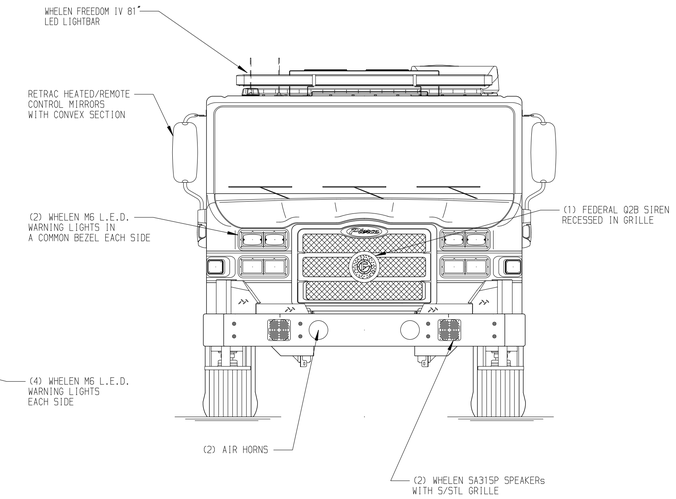

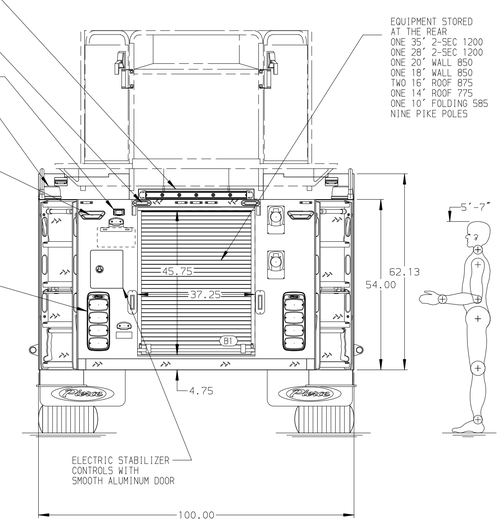

ALUMINUM BODY

MAXIMUM A.O.A. 10° EXCEEDED

MAXIMUM A.O.D. 9.50°

NOTE

DIMENSIONS SHOWN ARE APPROXIMATE AND ARE SUBJECT TO MINOR DEVIATIONS AS MAY OCCUR OR BE NECESSARY IN CONSTRUCTION.
MINOR DETAILS NOT SHOWN.

1. ONE RECEPTACLE LOCATED PER SHOP ORDER
2. AIR INLET/OUTLET WITH DISCONNECT COUPLINGS IN THE DRIVER SIDE STEPWELL
3. BATTERY CHARGER LOCATED BEHIND DRIVERS SEAT
4. BATTERY CHARGE INDICATOR LOCATED THROUGH WINDOW BEHIND DRIVERS SEAT
5. DC POWER TO AERIAL TIP
6. NON-RAISED AERIAL PEDESTAL
7. 3-in-1 LYFECOMBO BRACKETS AT AERIAL BASKET
8. 2-WAY INTERCOM SYSTEM BETWEEN AERIAL TIP AND TURNTABLE
9. HOSE STORAGE BOX ON RIGHT SIDE OF BASKET FOR 100' OF 1.75" D.J. POLY HOSE

SIDE ROLL & FRONTAL IMPACT PROTECTION

REV	DATE	BY	CH	
7	07OCT24	LWE	KBO	CHASSIS DATA
6	16AUG24	LWE	KBO	MAKE
5	24JUN24	LWE	KBO	PIERCE
4	11APR24	LWE	KBO	MODEL
				VELOCITY

Pierce MANUFACTURING INC.

TITLE: 100' ASCENDANT AERIAL PLATFORM AND BODY ASSEMBLY NO PUMP/ NO TANK

FOR: DALLAS FIRE DEPARTMENT DALLAS, TEXAS

DWG NO. 38794AD-SH1

JOB NO.	38794
SCALE 1:24	DATE
DRAWN BY LWE	02APR24
CHECKED BY KBO	05APR24
SHEET SIZE D	SHEET NO. 1 OF 2

View File Created 18-OCT-2024 06:59:41