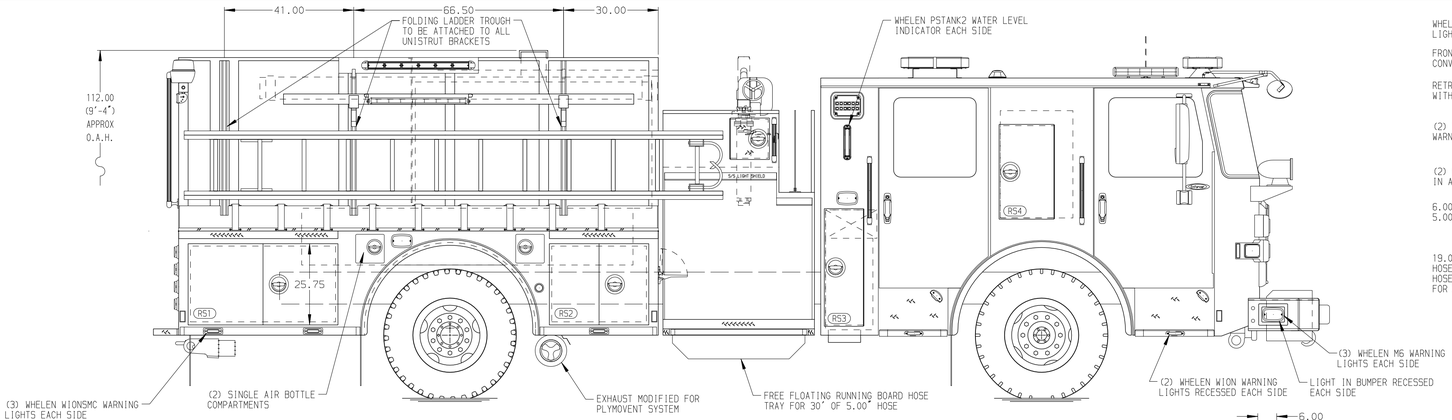

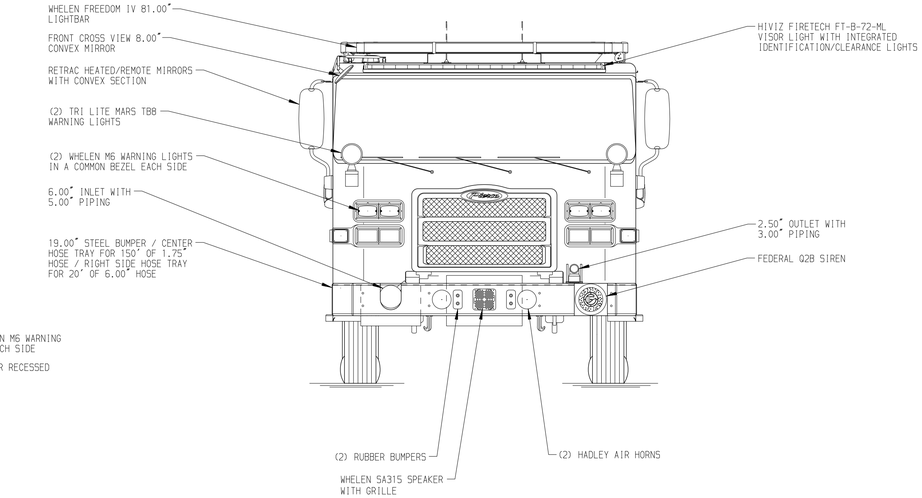

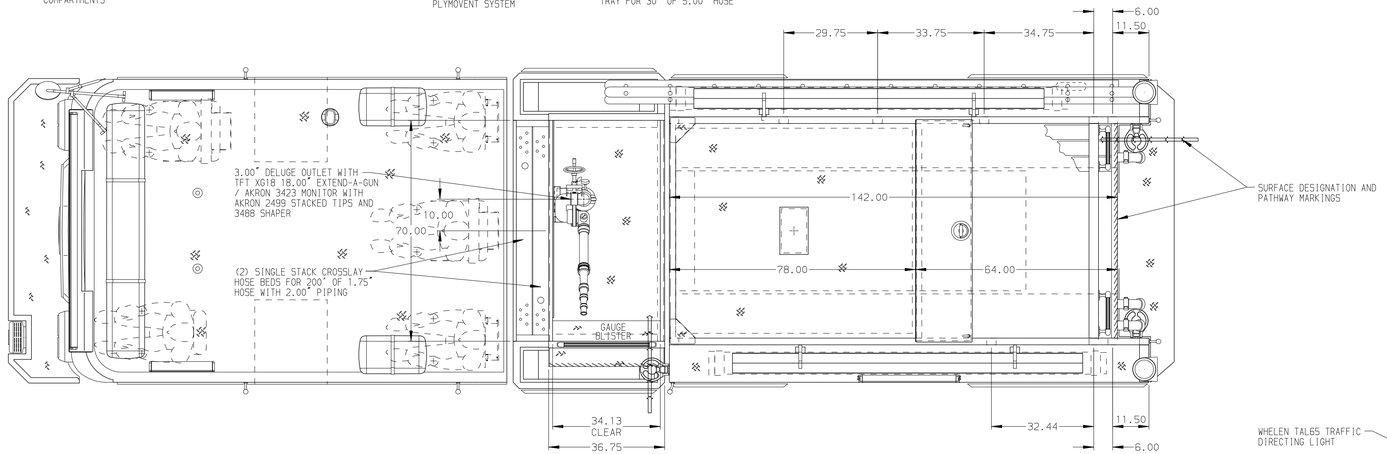

HOSEBED CAPACITIES

1. 500' OF 1.75" KEY COMBAT READY HOSE
2. 500' OF 1.75" KEY COMBAT READY HOSE
3. 500' OF 3.00" MERCEDES AQUAFLOW HOSE
4. 1000' OF 4.00" MERCEDES MEGAFLOW HOSE

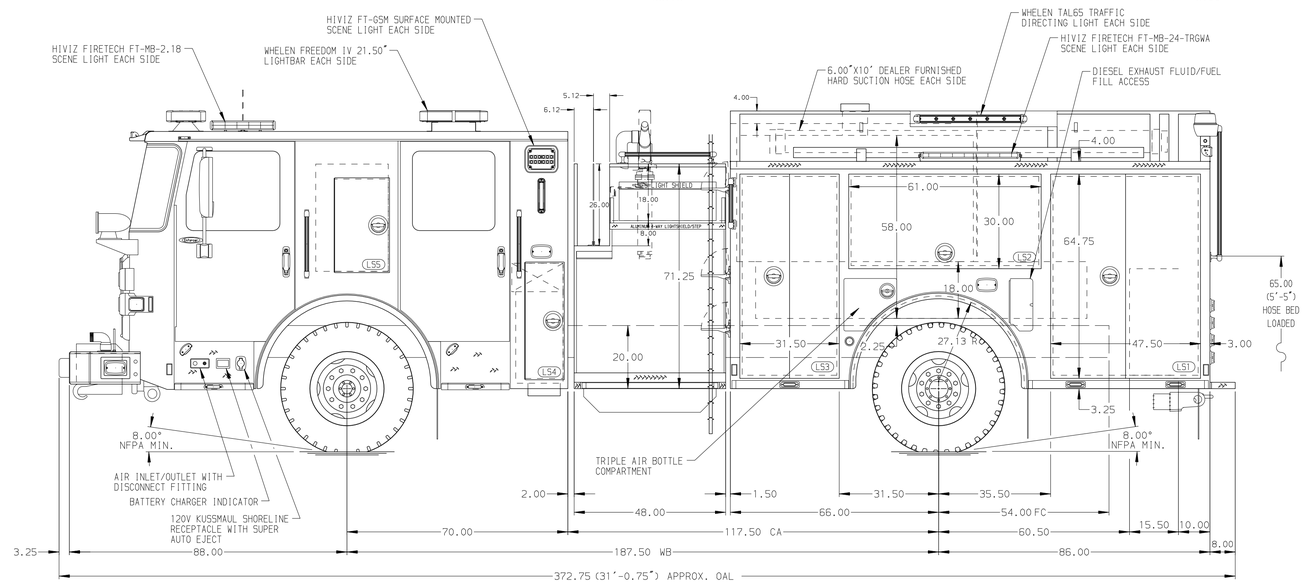

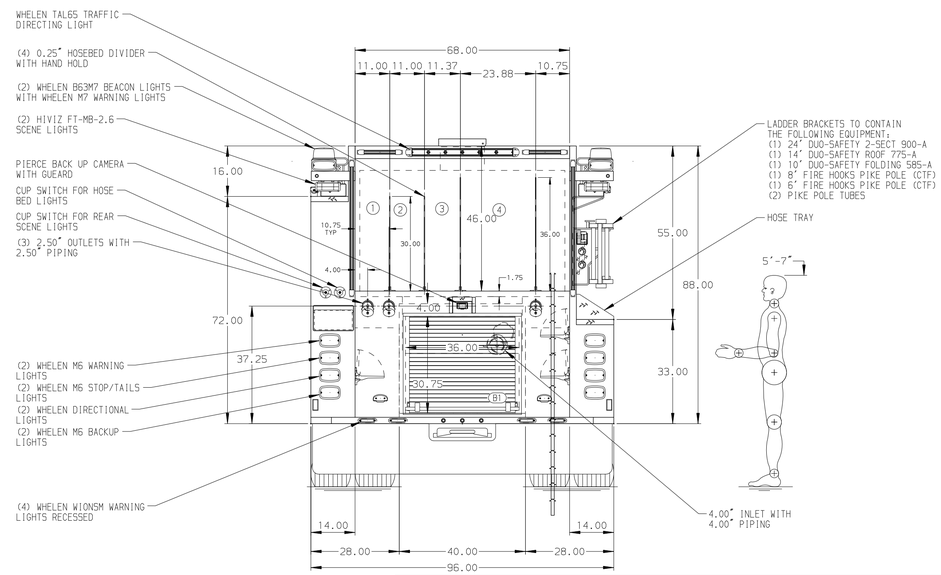

STAINLESS STEEL BODY | SIDE ROLL AND FRONTAL IMPACT PROTECTION

NOTE

DIMENSIONS SHOWN ARE APPROXIMATE AND ARE SUBJECT TO MINOR DEVIATIONS AS MAY OCCUR OR BE NECESSARY IN CONSTRUCTION.
MINOR DETAILS NOT SHOWN.

1. BATTERY CHARGER LOCATED ON THE LEFT SIDE EMS CABINET

REV	DATE	BY	CH
3	28AUG24	BST	JJR
2	23JUL24	BST	JJR

CHASSIS DATA
MAKE: PIERCE
MODEL: ENFORCER

Pierce MANUFACTURING INC.

TITLE: 1500GPM, 1000G WATER TANK 152" PUMPER BODY, MUX
FOR: BALTIMORE COUNTY MARYLAND TOWSON, MARYLAND
DWG NO.: 38797AD-SH1

JOB NO.	38797 01-06
SCALE	1:24
DRAWN BY	BST 27MAR24
CHECKED BY	JBL 27MAR24
SHEET SIZE	D
SHEET NO.	1 OF 2

View File Created 28-AUG-2024 11:52:24