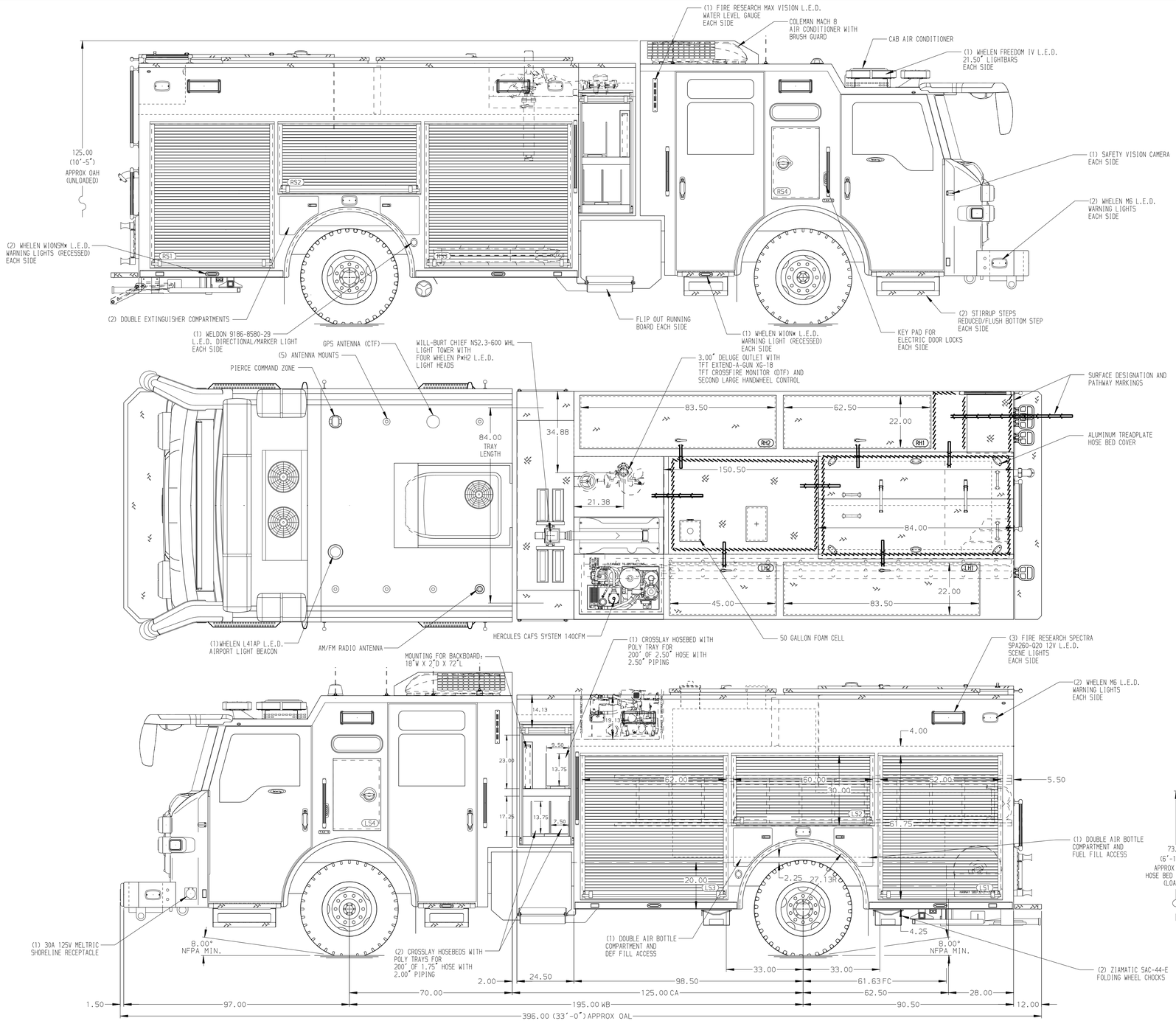

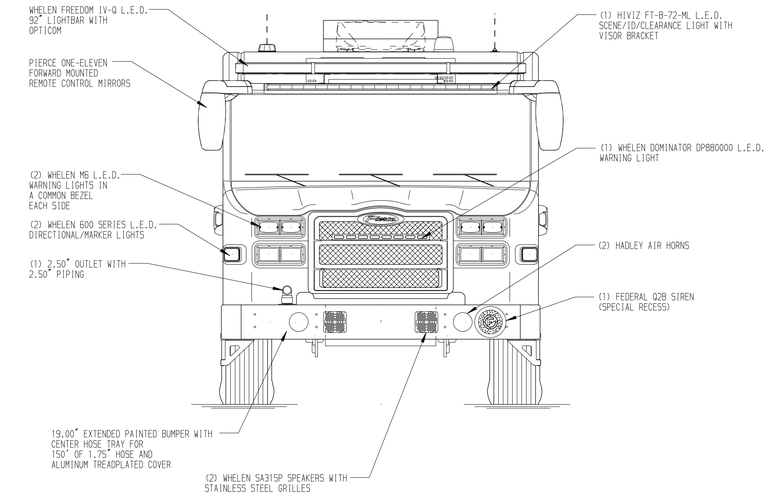

HOSEBED CAPACITIES

① - 1000' OF 5.00" KEY PRO-FLOW HOSE
② - 600' OF 3.00" KEY PRO-FLOW HOSE

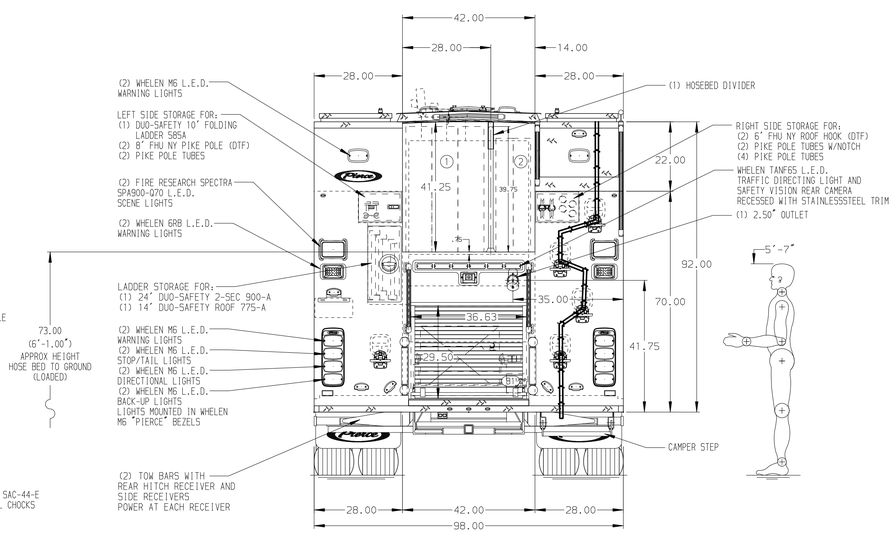

ALUMINUM BODY | REFERENCE JOB: 37935 & 38919 | SIDE ROLL AND FRONTAL IMPACT PROTECTION

NOTE

DIMENSIONS SHOWN ARE APPROXIMATE AND ARE SUBJECT TO MINOR DEVIATIONS AS MAY OCCUR OR BE NECESSARY IN CONSTRUCTION.
MINOR DETAILS NOT SHOWN.

1. WARN 9000 LB PORTABLE WINCH
2. AIR INLET/OUTLET LOCATED AT DRIVER'S SIDE PUMP PANEL
3. AIR COMPRESSOR LOCATED IN CAB SEAT RISER PER ORDER
4. BATTERY CHARGER LOCATED IN CAB PER ORDER
5. BATTERY CHARGE INDICATOR LOCATED AT DRIVER'S SEAT WITH BRACKET
6. SUB-FEED BREAKER BOX LOCATED BEHIND DRIVER'S SEAT PER ORDER
7. HUSKY 12 FOAM RESERVOIR LOCATED PER ORDER
8. XANTREX INVERTER LOCATED PER ORDER

REV	DATE	BY	CH
4	14FEB25	SAM	PHA
3	16OCT24	SAM	PHA
2	23AUG24	SAM	PHA
1	06JUN24	SAM	PHA

CHASSIS DATA
MAKE: PIERCE
MODEL: VELOCITY

Pierce MANUFACTURING INC.

TITLE: 1500GPM, 800G TANK, 750G WATER, 50G FOAM 189" PUC, MUX
FOR: CITY OF COLLEGE STATION FIRE DEPARTMENT COLLEGE STATION, TEXAS
DWG NO.: 38920AD-SH1

JOB NO.	38920
SCALE	1:24
DATE	
DRAWN BY	SAM 31MAY24
CHECKED BY	PHA 03JUN24
SHEET SIZE	D
SHEET NO.	1 OF 2

View File Created 17-FEB-2025 06:57:15