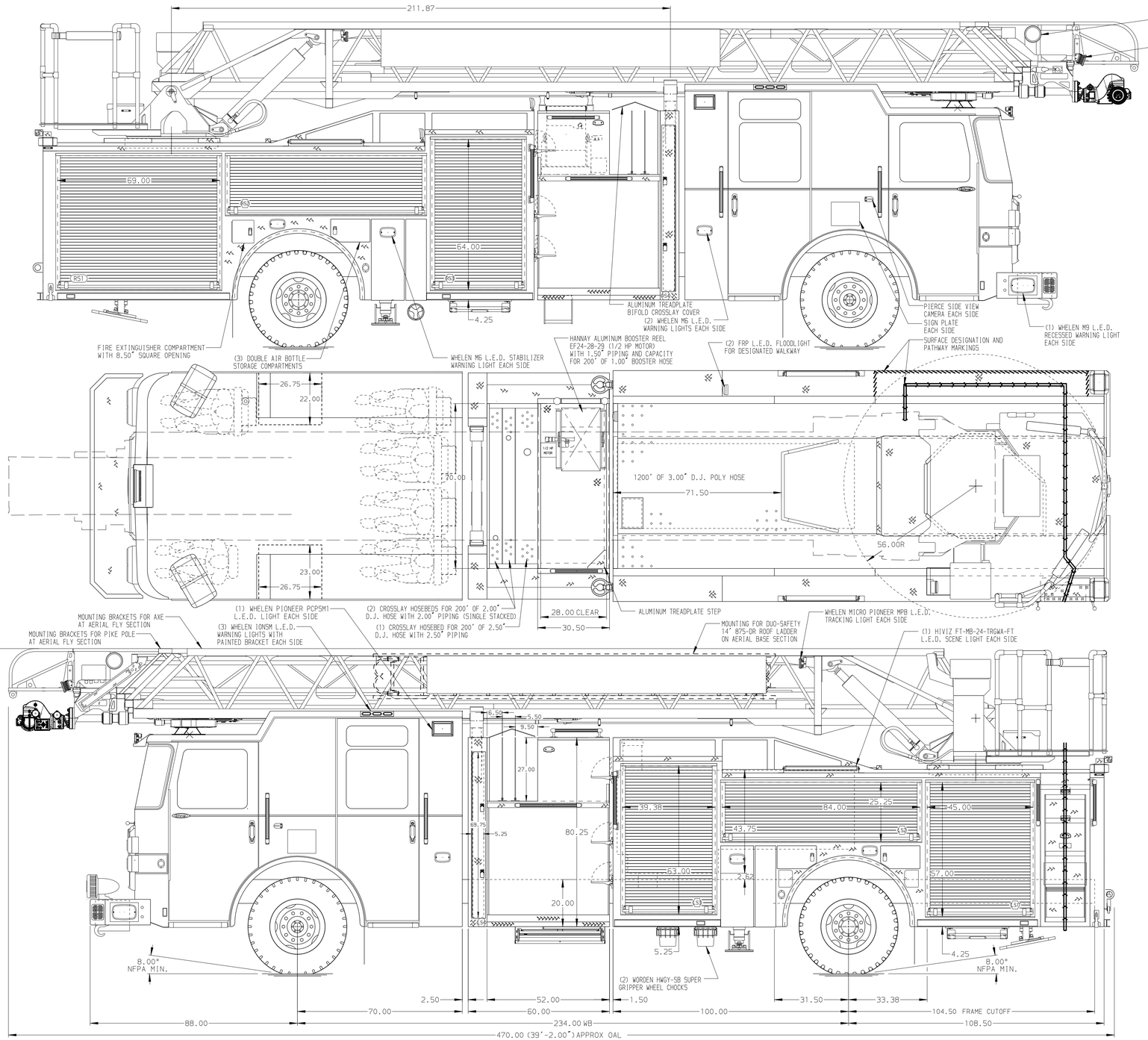

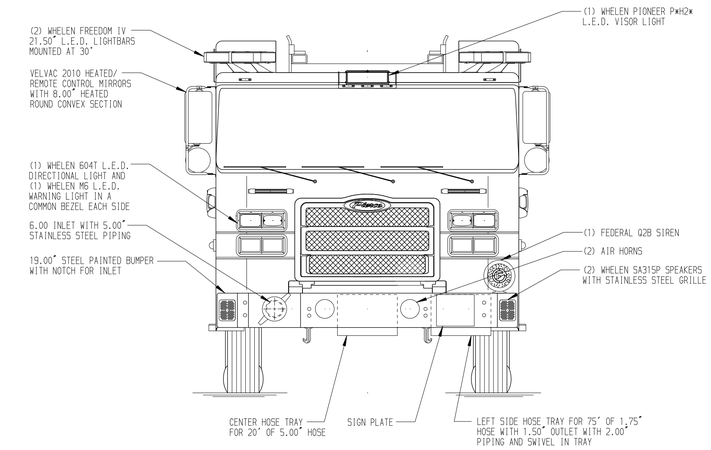

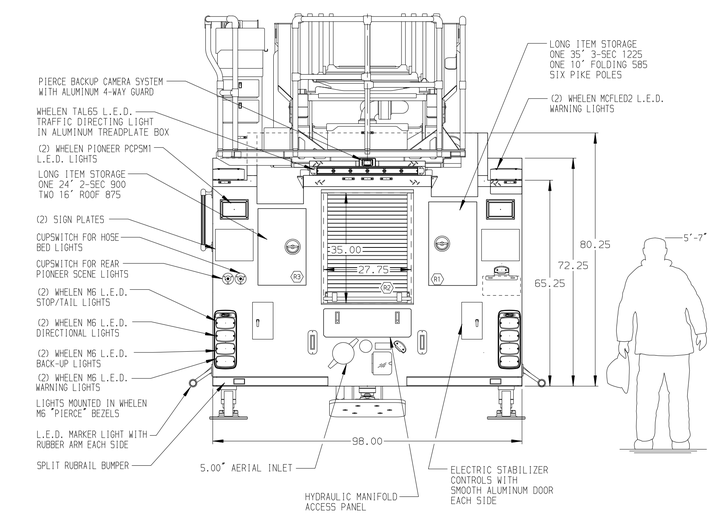

ALUMINUM BODY

NOTE

DIMENSIONS SHOWN ARE APPROXIMATE AND ARE SUBJECT TO MINOR DEVIATIONS AS MAY OCCUR OR BE NECESSARY IN CONSTRUCTION.
MINOR DETAILS NOT SHOWN.

1. SHORELINE RECEPTACLE WITH KUSSMAUL SUPER AUTO-EJECT LOCATED IN DRIVER SIDE STEP WELL OF CAB PER ORDER
2. AIR INLET/OUTLET WITH DISCONNECT FITTING AND ALUMINUM 4-WAY COVER LOCATED ON DRIVERS SIDE PUMP PANEL PER ORDER
3. DUAL L.E.D. LIGHT STRIPS LOCATED IN HOSE BED
4. TRIDENT FOLDING STEPS ON AERIAL DEVICE
5. TECNIQ L.E.D. RUNG STYLE LIGHTING ON AERIAL LADDER SECTIONS PER SHOP ORDER
6. 2-WAY INTERCOM SYSTEM BETWEEN AERIAL TIP OR PLATFORM AND TURNTABLE
7. LIFTING EYE ROPE RESCUE ATTACHMENT AT AERIAL TIP
8. 1500 GPM HIGH FLOW WATERWAY

REV	DATE	BY	CH
V	020CT24	LWE	JJR

CHASSIS DATA
MAKE: PIERCE
MODEL: ENFORCER

Pierce MANUFACTURING INC.

TITLE: 107' ASCENDANT AERIAL LADDER AND BODY ASSEMBLY
500 GALLON WATER TANK

FOR: CLAYTON COUNTY FIRE DEPARTMENT
RIVERDALE, GEORGIA

DWG NO.: 38951AD-SH1

JOB NO.	38951
SCALE	1:24
DATE	
DRAWN BY	LWE 06MAY24
CHECKED BY	JJR 08MAY24
SHEET SIZE	D
SHEET NO.	1 OF 2

View File Created 03-OCT-2024 11:57:38