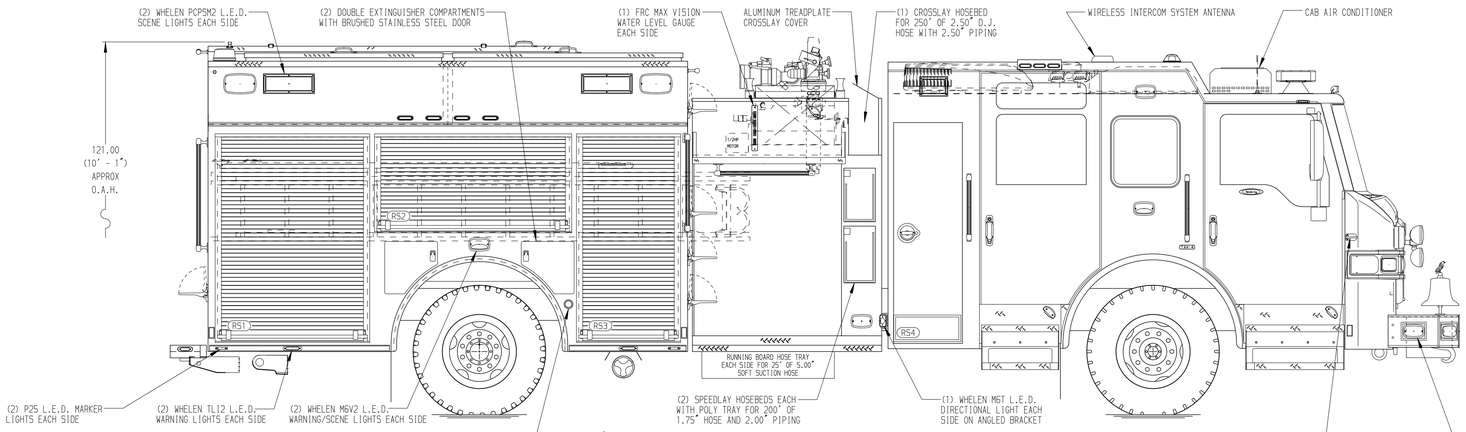

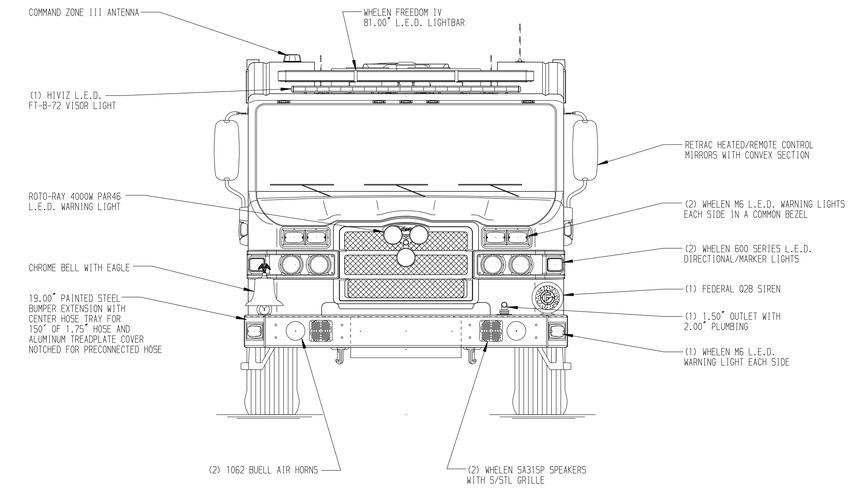

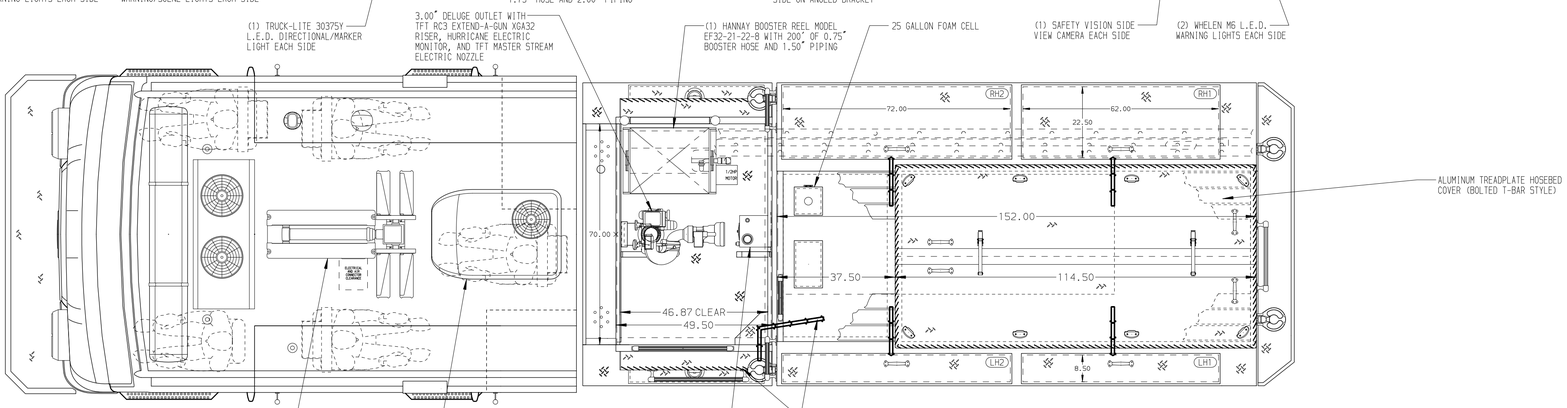

HOSEBED CAPACITIES

1. - 400' OF 1.75" D.J. POLY HOSE
2. - 400' OF 2.50" D.J. POLY HOSE
3. - 1050' OF 5.00" D.J. POLY HOSE
4. - 500' OF 2.50" D.J. POLY HOSE

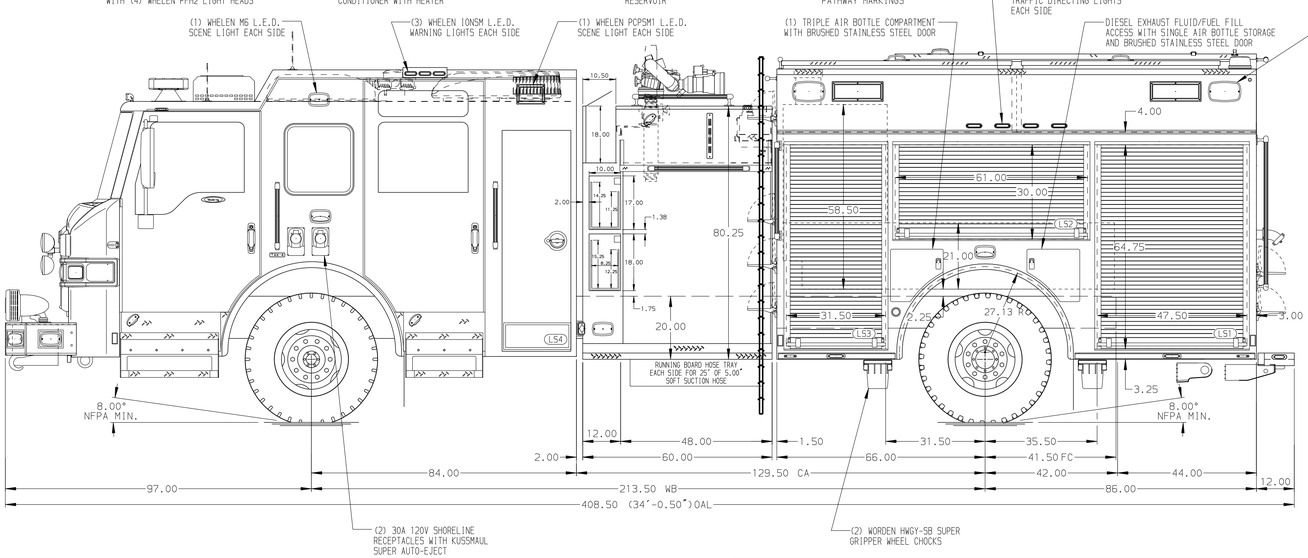

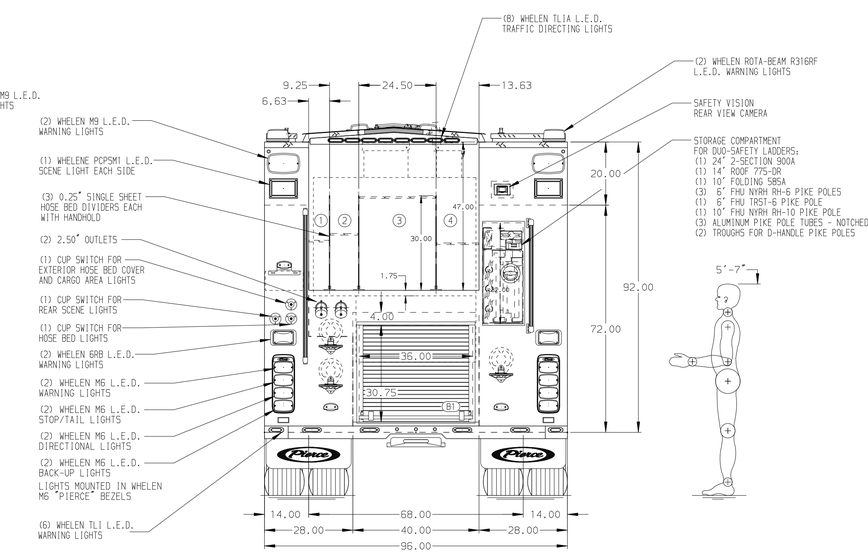

ALUMINUM BODY

SIDE ROLL AND FRONTAL IMPACT PROTECTION

NOTE

DIMENSIONS SHOWN ARE APPROXIMATE AND ARE SUBJECT TO MINOR DEVIATIONS AS MAY OCCUR OR BE NECESSARY IN CONSTRUCTION.
MINOR DETAILS NOT SHOWN.

1. AIR INLET WITH DISCONNECT COUPLING LOCATED ON LEFT SIDE PUMP PANEL
2. BATTERY CHARGER LOCATED BEHIND DRIVER'S SEAT
3. BATTERY CHARGER INDICATOR LOCATED ON DRIVER'S SEAT RISER
4. ONE WHELEN 70CQELZR L.E.D. LIGHT LOCATED AT THE FRONT OF THE HOSE BED
5. ONE 5' FIRE HOOKS UNLIMITED TAL-5 HOOK SHIPPED LOOSE
6. ONSPOT AUTOMATIC TIRE CHAINS TO BE PROVIDED AT REAR

REV	DATE	BY	CH
1	19FEB25	JJB	KBO
2	02DEC24	JJB	KBO
3	020CT24	JJB	KBO
4	09JUL24	JJB	KBO

CHASSIS DATA: MAKE PIERCE; MODEL VELOCITY

TITLE: 2000 GPM, 525G TANK, 500G WATER, 25G FOAM 152" 2G PUMPER, VELOCITY ESP

FOR: FRISCO FIRE DEPARTMENT FRISCO, TEXAS

DWG NO. 39019AD-SH1

Pierce MANUFACTURING INC.

JOB NO.	39019
SCALE 1:24	DATE
DRAWN BY JJB	24JUN24
CHECKED BY KBO	24JUN24
SHEET SIZE D	SHEET NO. 1 OF 2

View File Created 19-FEB-2025 11:59:07