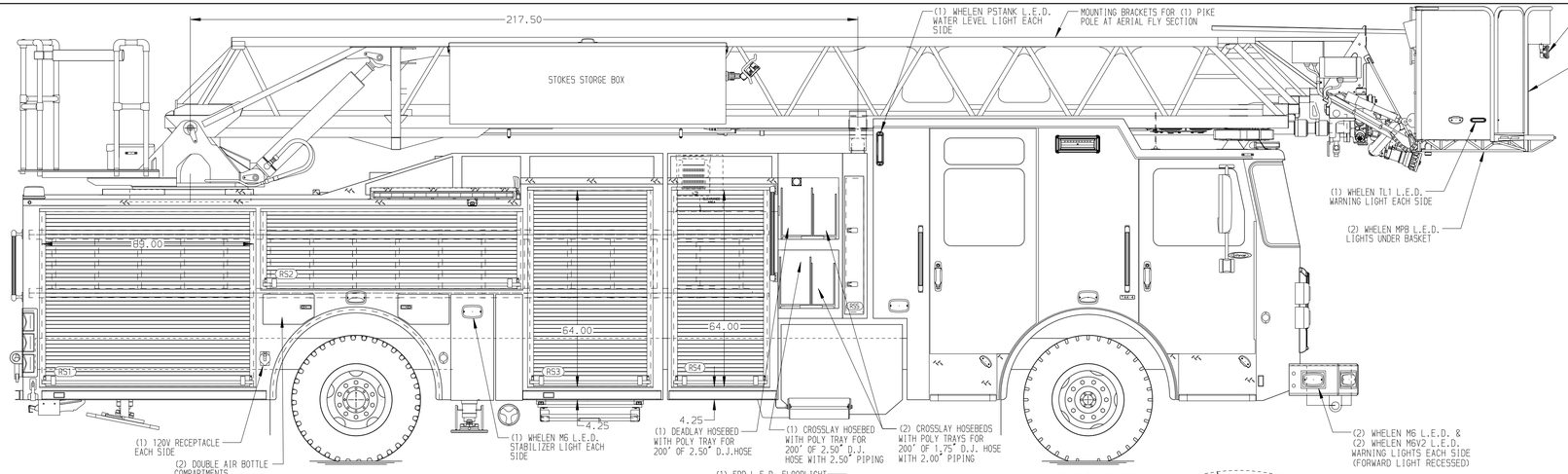

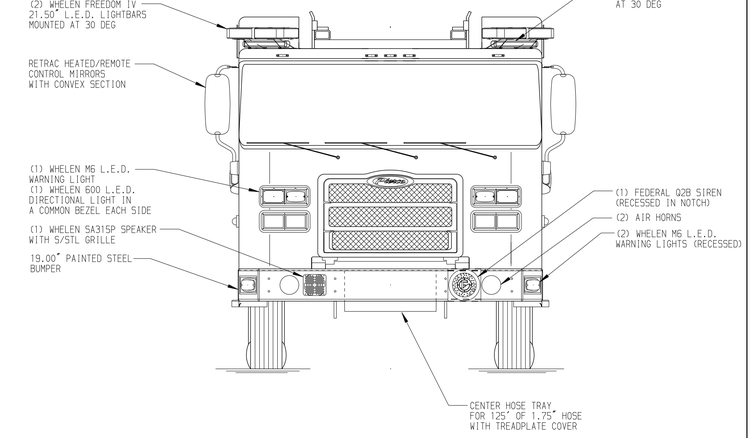

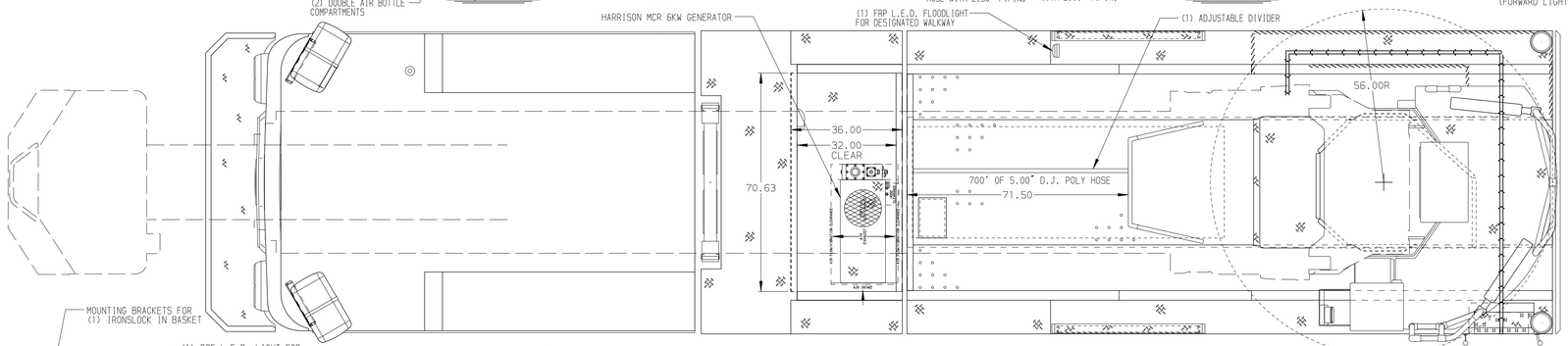

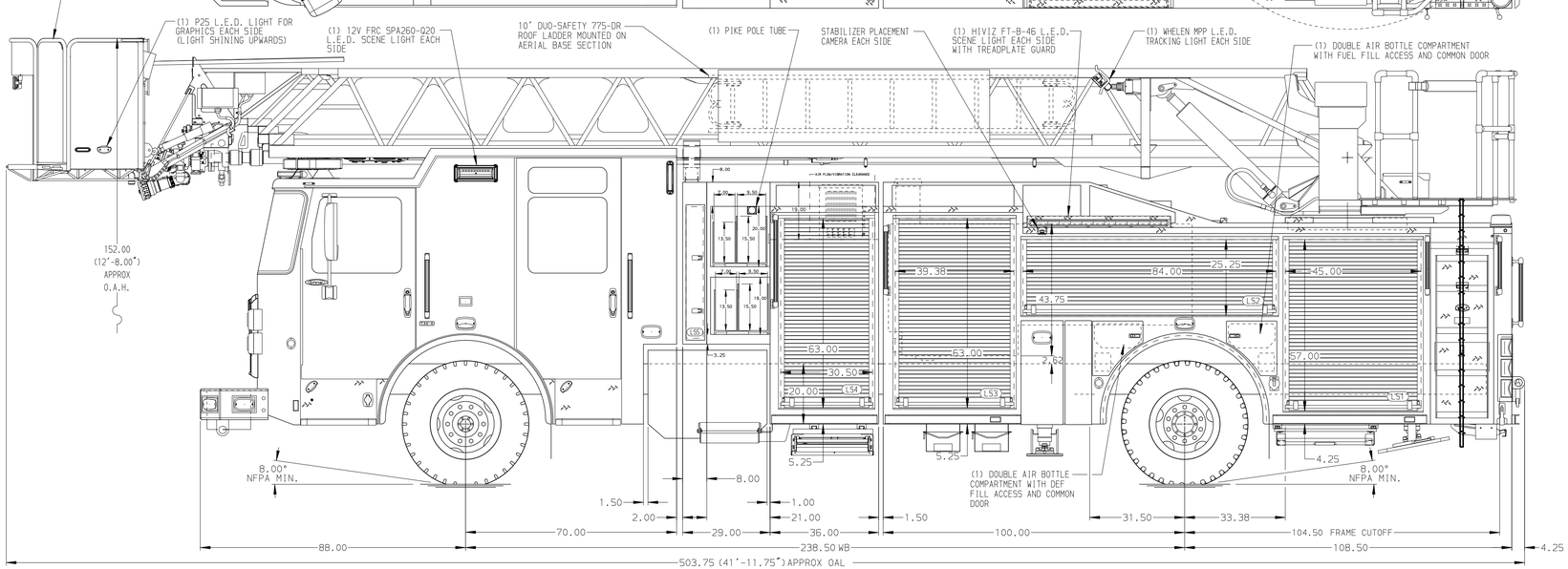

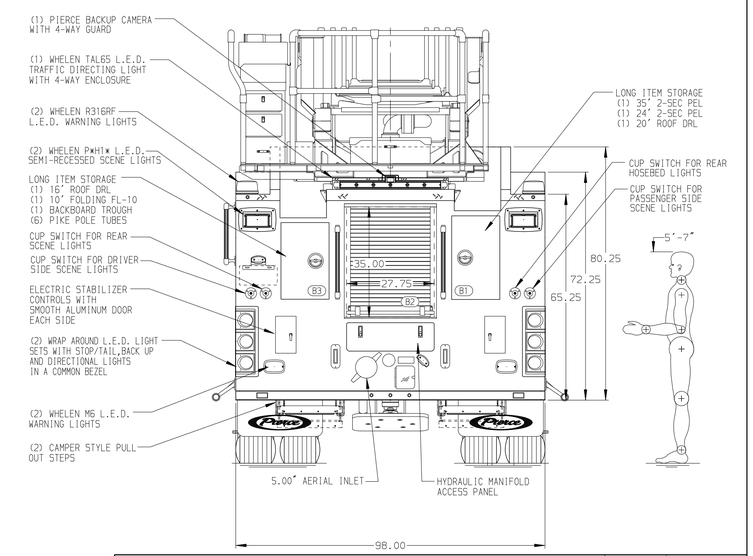

ALUMINUM BODY

NOTE

DIMENSIONS SHOWN ARE APPROXIMATE AND ARE SUBJECT TO MINOR DEVIATIONS AS MAY OCCUR OR BE NECESSARY IN CONSTRUCTION.
MINOR DETAILS NOT SHOWN.

1. NO LIMITED RETRACTION REQUIRED
2. ONE 1.50 OUTLET WITH 2.00 PIPING AND SWIVEL LOCATED IN CENTER BUMPER TRAY
3. SHORELINE RECEPTACLE WITH KUSSMAUL SUPER AUTO-EJECT LOCATED REARWARD IN DRIVER SIDE STEPWELL
4. AIR INLET WITH DISCONNECT COUPLING LOCATED FORWARD IN THE DRIVER SIDE STEPWELL
5. BATTERY CHARGER/COMPRESSOR LOCATED PER ORDER
6. BATTERY CHARGE INDICATOR LOCATED ON DRIVER SIDE OF CAB
7. SEVEN ADJUSTABLE SHELVES LOCATED IN COMPARTMENTS PER ORDER
8. THREE FLOOR MOUNTED SLIDE-OUT TRAYS LOCATED IN COMPARTMENTS PER ORDER
9. ONE ADJUSTABLE SLIDE-OUT TRAY LOCATED IN COMPARTMENT PER ORDER
10. ONE SWING-OUT TOOLBOARD LOCATED IN COMPARTMENT PER ORDER
11. ONE VERTICAL PARTITION LOCATED IN COMPARTMENT PER ORDER
12. FIVE BACK WALL MOUNTED TOOLBOARDS LOCATED IN COMPARTMENTS PER ORDER
13. WIRELESS CAMERA SYSTEM BETWEEN BASKET AND AERIAL PLATFORM
14. 1250 GPM HIGH FLOW WATERWAY
15. NON-RAISED AERIAL PEDESTAL
16. ONE CIRCUIT BREAKER PANEL LOCATED IN COMPARTMENT PER ORDER
17. TECNIQ RUNG LIGHTING AT AERIAL DEVICE

REV	DATE	BY	CH
V	21MAR25	ANZ	ZWE
V	21OCT24	ANZ	ZWE
V	07SEP24	ANZ	ZWE
V	27JUN24	ANZ	BYO

CHASSIS DATA
MAKE: PIERCE
MODEL: ENFORCER

Pierce MANUFACTURING INC.

TITLE: 110' ASCENDANT AERIAL LADDER AND BODY ASSEMBLY
500 GALLON WATER TANK
FOR: PLANT CITY FIRE RESCUE
PLANT CITY, FL
DWG NO.: 39029AD

JOB NO.	39029
SCALE	1:24
DATE	
DRAWN BY	ANZ 17JUN24
CHECKED BY	BYO 24JUN24
SHEET SIZE	D
SHEET NO.	1 OF 1

View File Created 21-MAR-2025 12:46:55