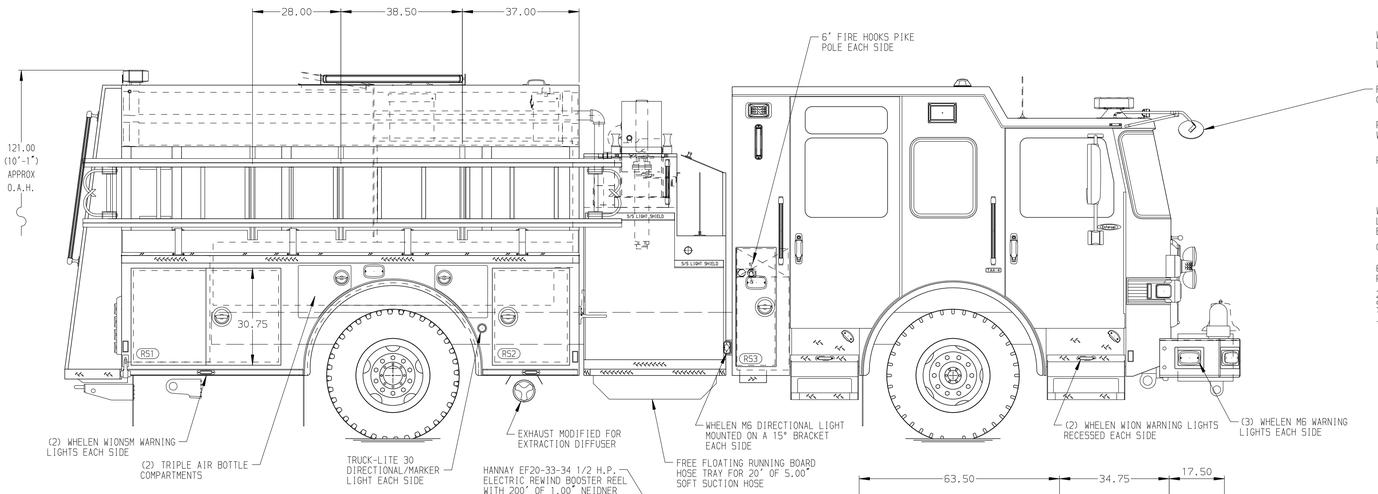

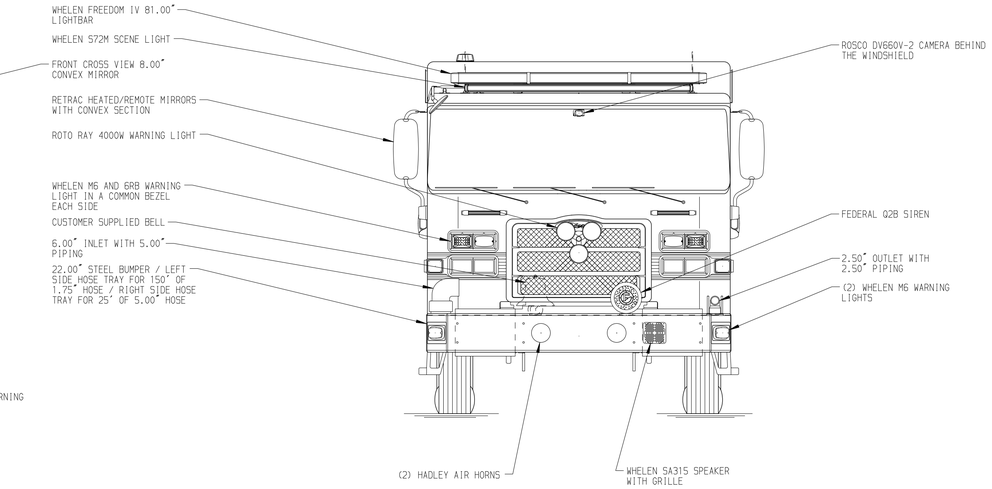

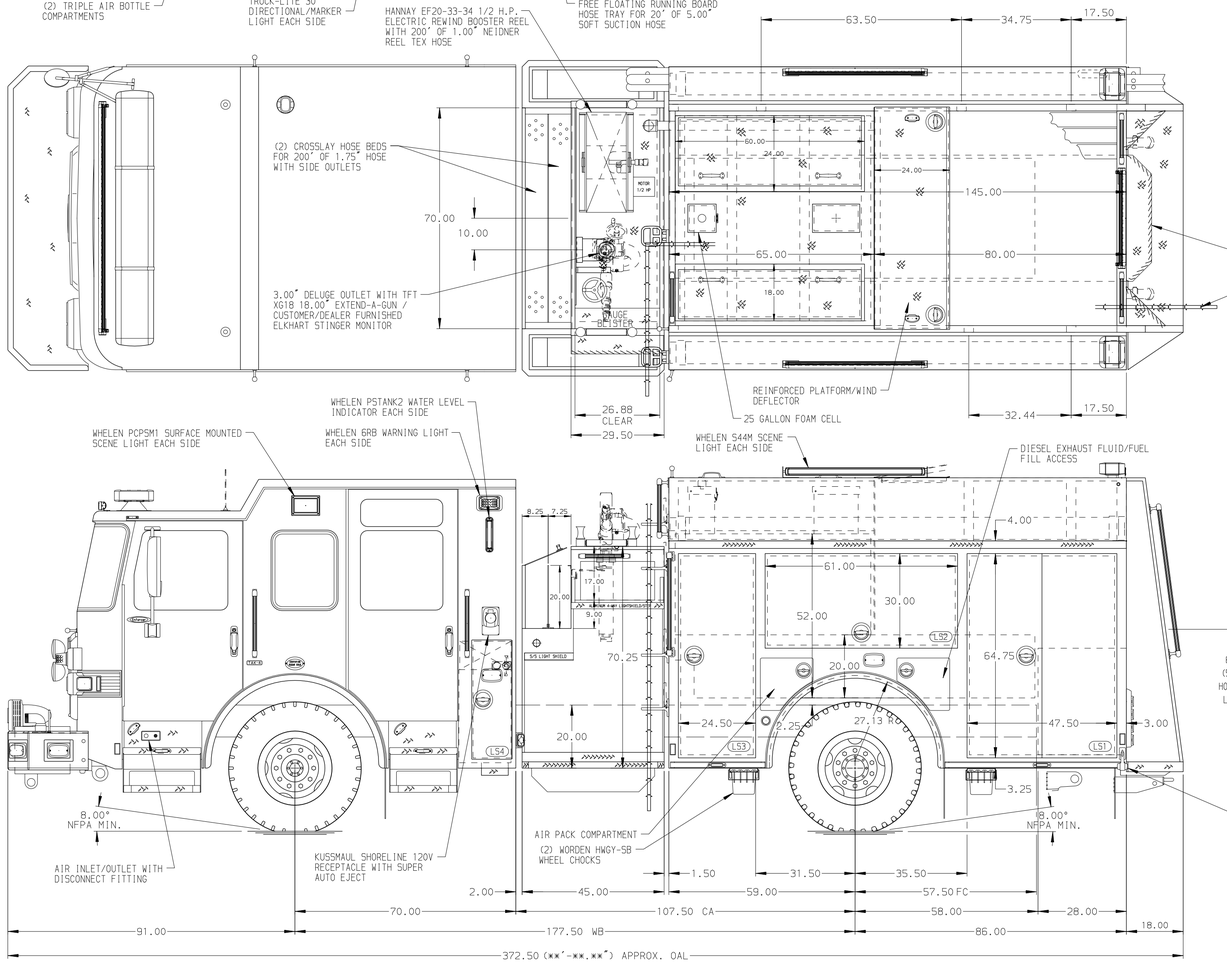

HOSEBED CAPACITIES

1. 400' OF 1.75" D.J. POLY HOSE
2. 1200' OF 4.00" D.J. POLY HOSE
3. 600' OF 3.00" D.J. POLY HOSE
4. 250' OF 1.75" D.J. POLY HOSE
5. 200' OF 2.50" D.J. POLY HOSE (PRE-CONNECTED)

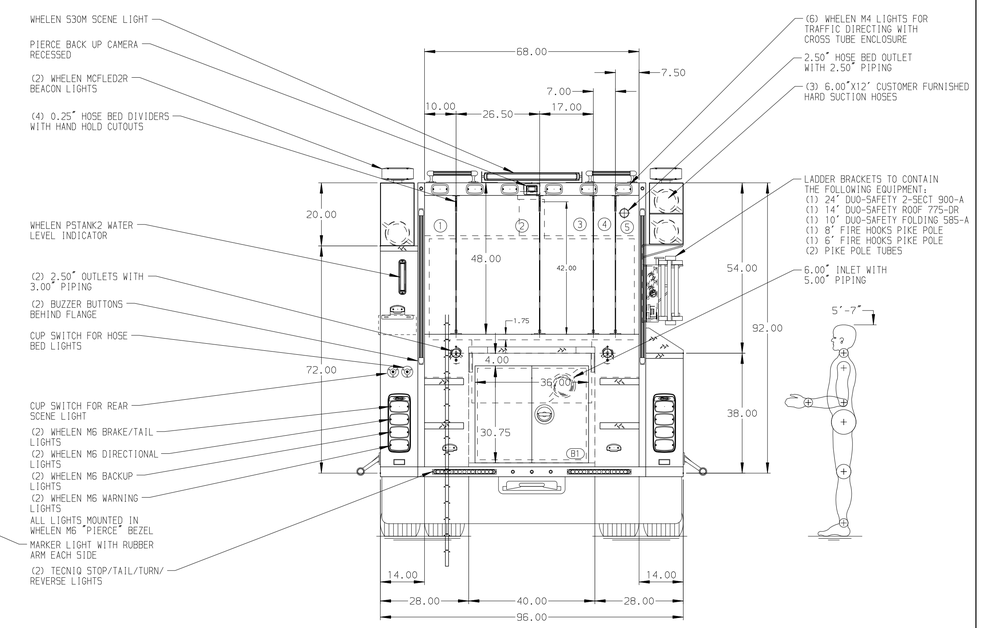

ALUMINUM BODY | SIDE ROLL AND FRONTAL IMPACT PROTECTION

NOTE

DIMENSIONS SHOWN ARE APPROXIMATE AND ARE SUBJECT TO MINOR DEVIATIONS AS MAY OCCUR OR BE NECESSARY IN CONSTRUCTION.
MINOR DETAILS NOT SHOWN.

REV	DATE	BY	CH
5	09MAY25	BST	CSH
4	03DEC24	BST	CSH
3	07NOV24	BST	CSH
2	020CT24	BST	CSH
1	19JUL24	KLE	CDU

CHASSIS DATA — MAKE: PIERCE — MODEL: ENFORCER

Pierce MANUFACTURING INC.

TITLE: 1750GPM, 775G TANK, 750G WATER, 25G FOAM CELL 145" 2G PUMPER, MUX

FOR: MINERAL VOLUNTEER FIRE DEPARTMENT MINERAL, VIRGINIA

DWG NO.: 39052AD

JOB NO.	39052
SCALE	1:24
DATE	
DRAWN BY	BST
DATE	03JUL24
CHECKED BY	CDU
DATE	12JUL24
SHEET SIZE	D
SHEET NO.	1 OF 1

View File Created 12-MAY-2025 07:42:39