RIGHT SIDE COMPARTMENTS
CONTAIN THE FOLLOWING:

COMPARTMENT RS1 CONTAINS:
- (1) "SPACESAVER" 2-BOTTLE FILL ENCLOSURE
- (1) CASCADE SYSTEM CONTROL PANEL
- (2) VERTICAL COMPARTMENT DIVIDERS
- (1) RACK FOR 10 SCBA BOTTLES
- (1) STD DEPTH ADJ SHELF
- (1) HIGH PRESSURE AIR REEL W/200' OF HOSE
- (1) ELECTRIC CORD REEL WITH 200' OF 10/3 YELLOW CORD

COMPARTMENT RS2 CONTAINS:
- (1) STD DEPTH ADJ SLIDE OUT/TILT TRAY
- (1) FLOOR MOUNTED TRAY
-
-

COMPARTMENT RS3 CONTAINS:
- (2) VERTICAL COMPARTMENT DIVIDERS
- (1) STD DEPTH ADJ SLIDE OUT/TILT TRAY
- (2) FLOOR MOUNTED TRAYS WITH TOOLBOARDS
- (1) 15/20A,120V DUPLEX RECEPTACLE
-
-

COMPARTMENT RS4 CONTAINS:
- (1) CAB LIFT CONTROLLER
- (1) VERTICAL COMPARTMENT DIVIDER
- (2) STD DEPTH ADJ SHELVES
- (2) STD DEPTH ADJ SLIDE OUT/TILT TRAYS
- (1) FLOOR MOUNTED TRAY
-
-
-

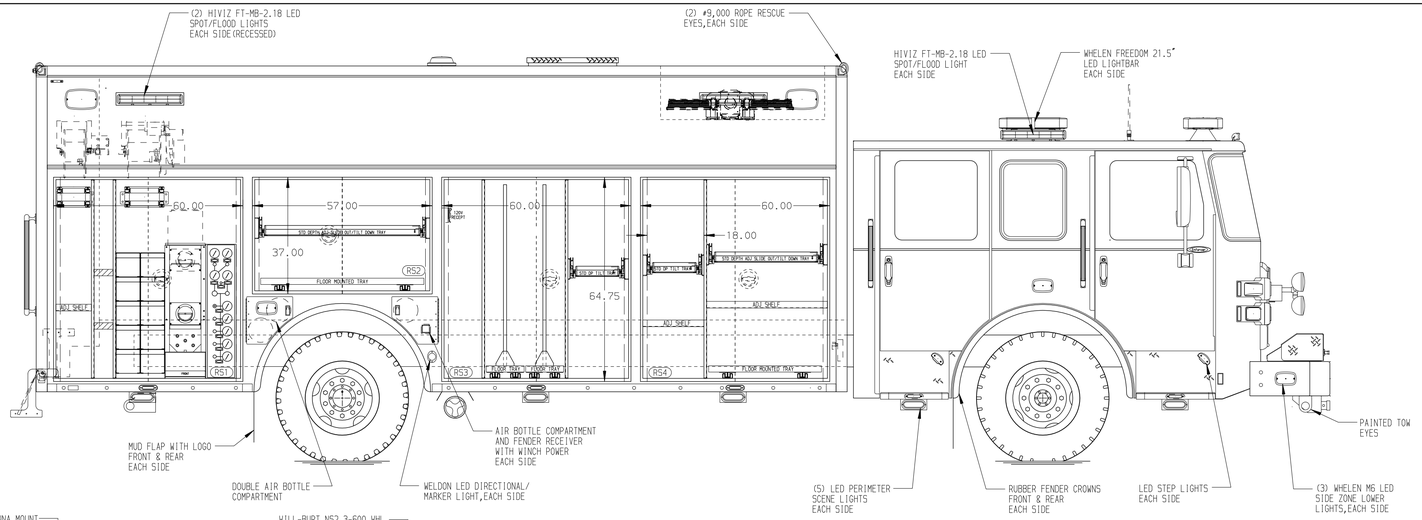

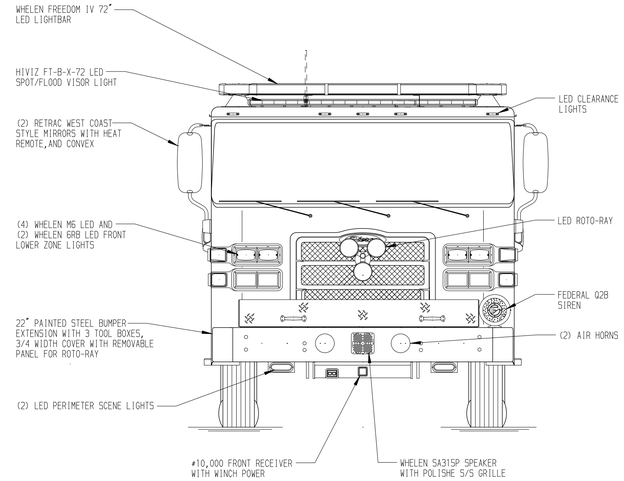

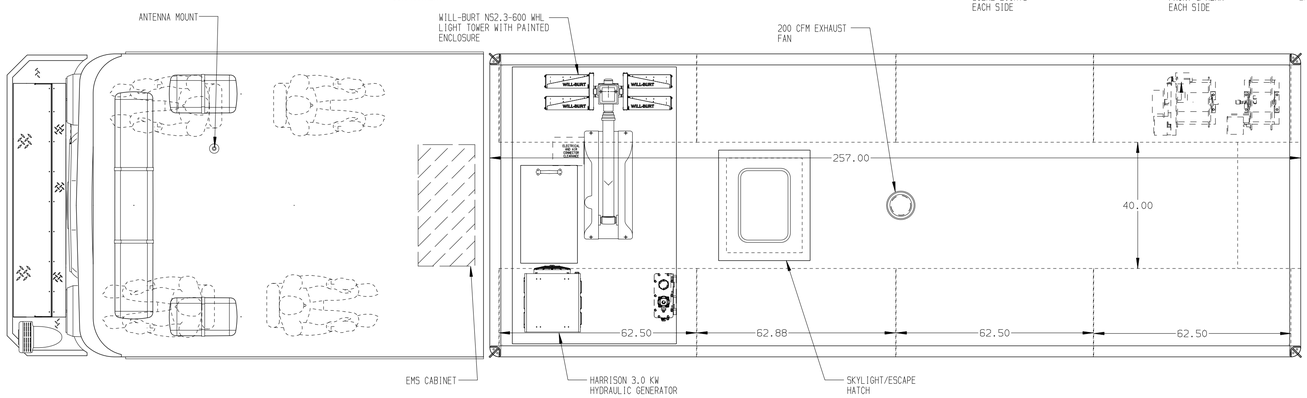

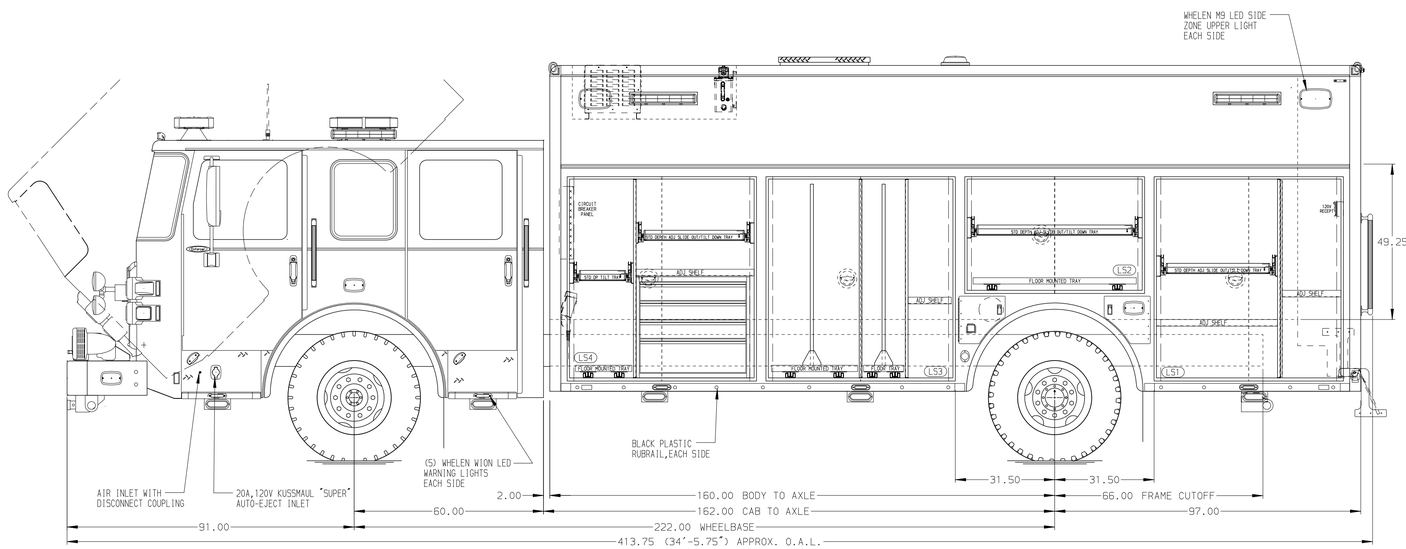

LEFT SIDE COMPARTMENTS
CONTAIN THE FOLLOWING:

COMPARTMENT LS1 CONTAINS:
- (2) STD DEPTH ADJ SHELVES
- (1) STD DEPTH ADJ SLIDE OUT/TILT TRAY
- (1) 15/20A,120V DUPLEX RECEPTACLE
- (1) VERTICAL COMPARTMENT DIVIDER
-

COMPARTMENT LS2 CONTAINS:
- (1) STD DEPTH ADJ SLIDE OUT/TILT TRAY
- (1) FLOOR MOUNTED TRAY
-
-

COMPARTMENT LS3 CONTAINS:
- (2) VERTICAL COMPARTMENT DIVIDERS
- (1) STD DEPTH ADJ SHELF
- (2) FLOOR MOUNTED TRAYS WITH TOOLBOARDS
-
-
-

COMPARTMENT LS4 CONTAINS:
- (1) VERTICAL COMPARTMENT DIVIDER
- (1) 4-DRAWER C-TECH CABINET
- (1) STD DEPTH FIXED SHELF
- (2) STD DEPTH ADJ SLIDE OUT/TILT TRAYS
- (1) FLOOR MOUNTED TRAY
- (1) NIGHTSCAN CONTROLLER
- (1) CIRCUIT BREAKER BOX
-
-

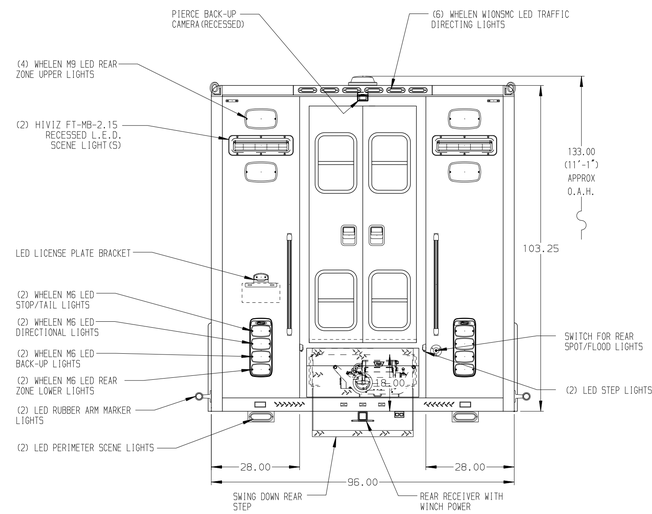

NOTE
DIMENSIONS SHOWN ARE APPROXIMATE AND ARE SUBJECT TO MINOR DEVIATIONS AS MAY OCCUR OR BE NECESSARY IN CONSTRUCTION.
MINOR DETAILS NOT SHOWN.

NOTES:
1. POLISHED S/S SCUFFPLATES ON CAB AND CREW CAB DOORS
2. FLOOR IN CAB AND CREW CAB TO BE PADDED RUBBER
3. BATTERY CHARGE INDICATOR LOCATED ON DRIVER'S SEAT RISER
4. AMDOR LED STRIP LIGHTS IN ALL BODY ROLL-UP DOORS

NOTE:
LAP DOORS HAVE BEEN SHOWN IN HIDDEN LINES TO CLEARLY IDENTIFY THE EQUIPMENT IN EACH COMPARTMENT. DASHED LINES ON SIDES ARE DOORS IN OPEN POSITION

SIDE ROLL AND FRONTAL IMPACT PROTECTION

CLEAR DOOR WIDTH KEY

AMDOR ROLL UP DOORS:	-2 1/4"
GORTITE ROLL UP DOORS:	-2 1/2"
PIERCE DOUBLE LAP DOORS:	-4 1/4"
PIERCE LIFT-UP LAP DOORS:	-1 1/2"

(EX: 60"F-F - 2 1/4"= 57 3/4" CLEAR)
(F-F)= FRAME TO FRAME

REV	DATE	BY	CH
7	02MAY24	DHE	CDK
6	23APR24	SHD	AZU
5	01MAR24	DHE	CDK
4	04JAN24	DHE	CDK

CHASSIS DATA
MAKE: PIERCE
MODEL: EN6000
DWG NO.: 39055AD-SH1

Pierce MANUFACTURING INC.

TITLE: HEAVY DUTY RESCUE WALKIN
FOR: ABINGDON VOLUNTEER FIRE & RESCUE BID #1179
MICHAEL YANCEY

JOB NO. 39055
SCALE 1:24
DATE
DRAWN BY DHE 11DEC23
CHECKED BY CDK 14DEC23
SHEET SIZE D
SHEET NO. 1 OF 1

View File Created 03-MAY-2024 11:30:48