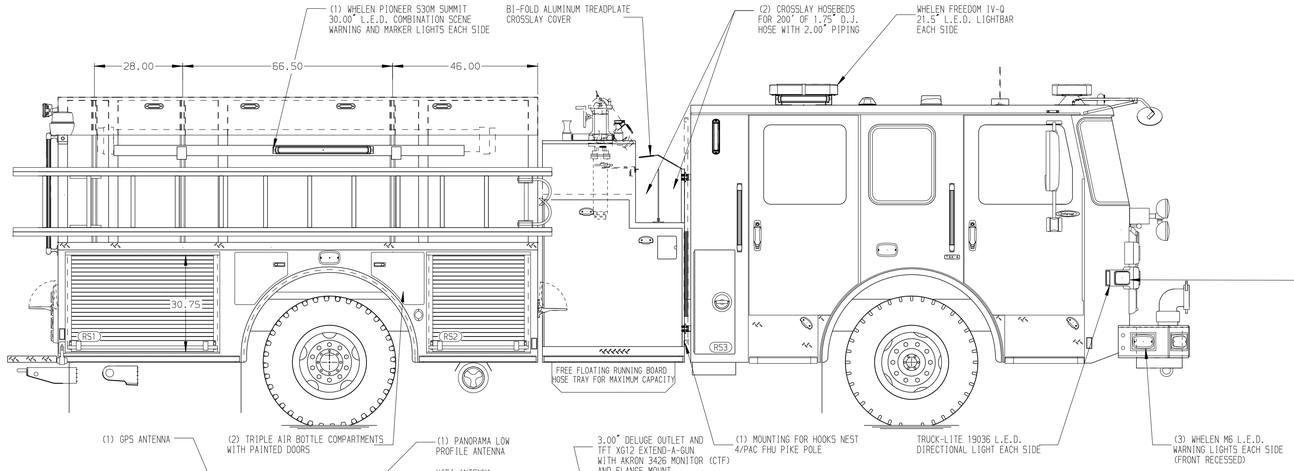

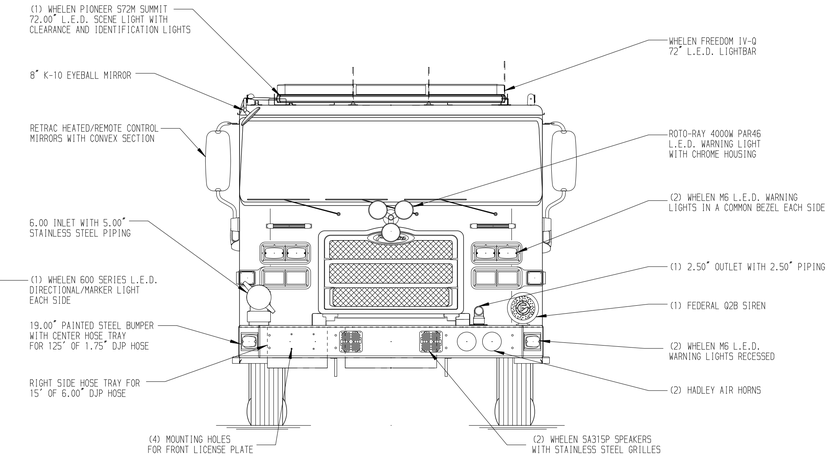

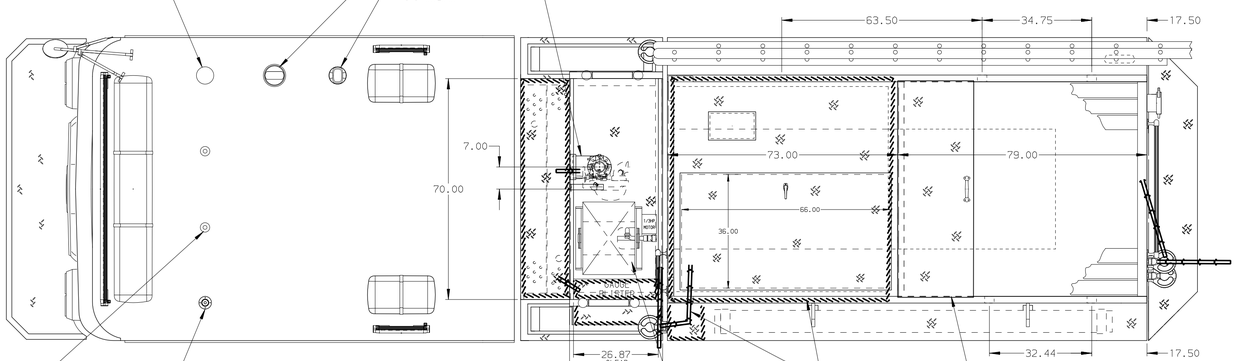

HOSEBED CAPACITIES

1 - 350' OF 1.75" D.J. POLY HOSE
2 - 200' OF 1.75" D.J. POLY HOSE (DEADLOAD)
3 - 500' OF 3.00" D.J. POLY HOSE
4 - 1200' OF 4.00" D.J. POLY HOSE
5 - 300' OF 2.50" D.J. POLY HOSE

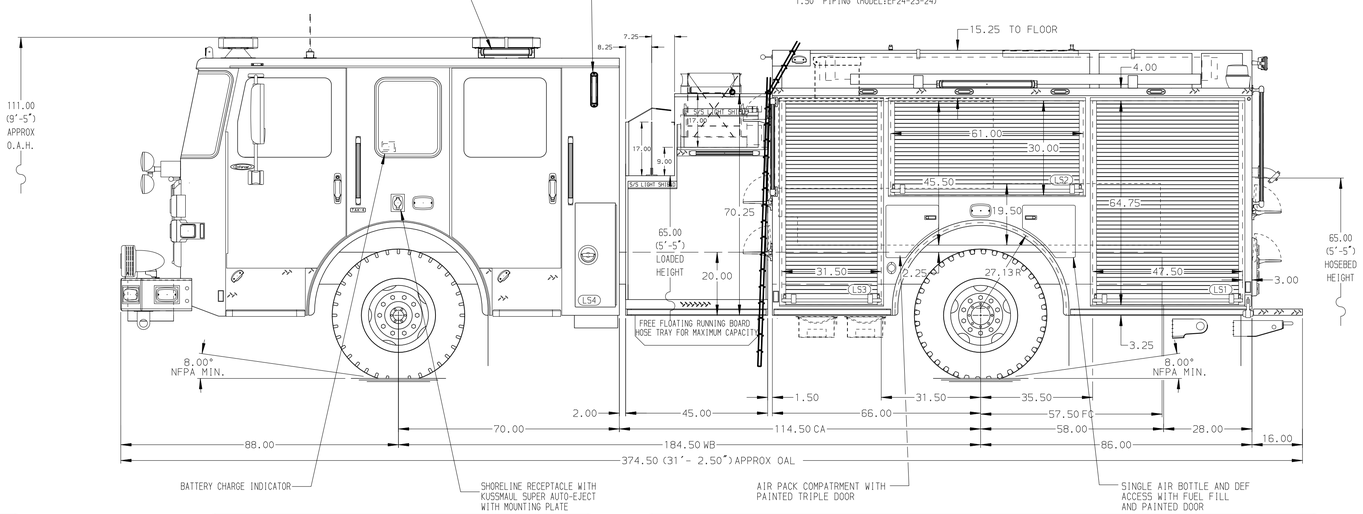

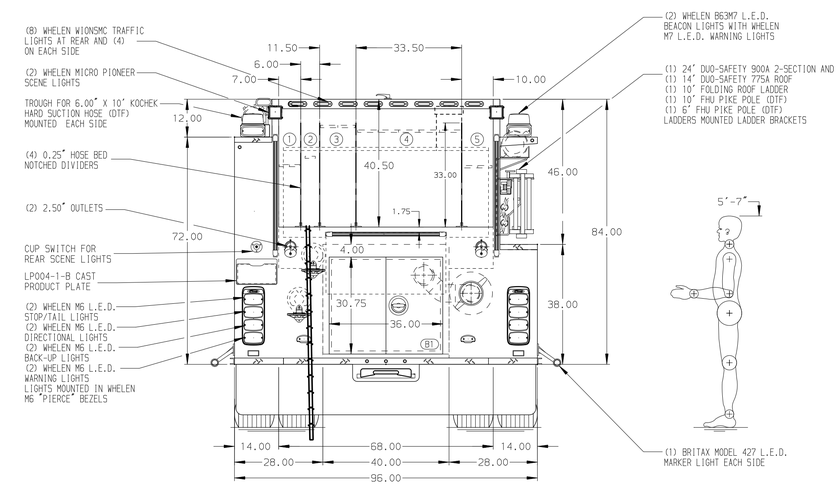

ALUMINUM BODY

MAXIMUM O.A.H. 123.50"

SIDE ROLL AND FRONTAL IMPACT PROTECTION

NOTE

DIMENSIONS SHOWN ARE APPROXIMATE AND ARE SUBJECT TO MINOR DEVIATIONS AS MAY OCCUR OR BE NECESSARY IN CONSTRUCTION.
MINOR DETAILS NOT SHOWN.

1. ONSPOT AUTOMATIC TIRE CHAINS TO BE PROVIDED AT REAR
2. BATTERY CHARGER LOCATED BEHIND DRIVER'S SEAT
3. AIR INLET/OUTLET WITH DISCONNECT FITTING LOCATED PER ORDER

REV	DATE	BY	CH	
E	14MAY25	JJB	CSH	CHASSIS DATA
D	21OCT24	JJB	CSH	
C	26SEP24	JJB	CSH	MAKE
B	20SEP24	JJB	CSH	PIERCE
A	23JUL24	JJB	CDU	MODEL
				ENFORCER

Pierce MANUFACTURING INC.

TITLE: 2000 GPM, 750G WATER TANK 152" 2G PUMPER, MUX

FOR: COUNTY OF HANOVER HANOVER, VIRGINIA

DWG NO.: 39056AD

JOB NO.	39056 01-02
SCALE 1:24	DATE
DRAWN BY JJB	15JUL24
CHECKED BY CDU	15JUL24
SHEET SIZE D	SHEET NO. 1 OF 1

View File Created 14-MAY-2025 14:19:47