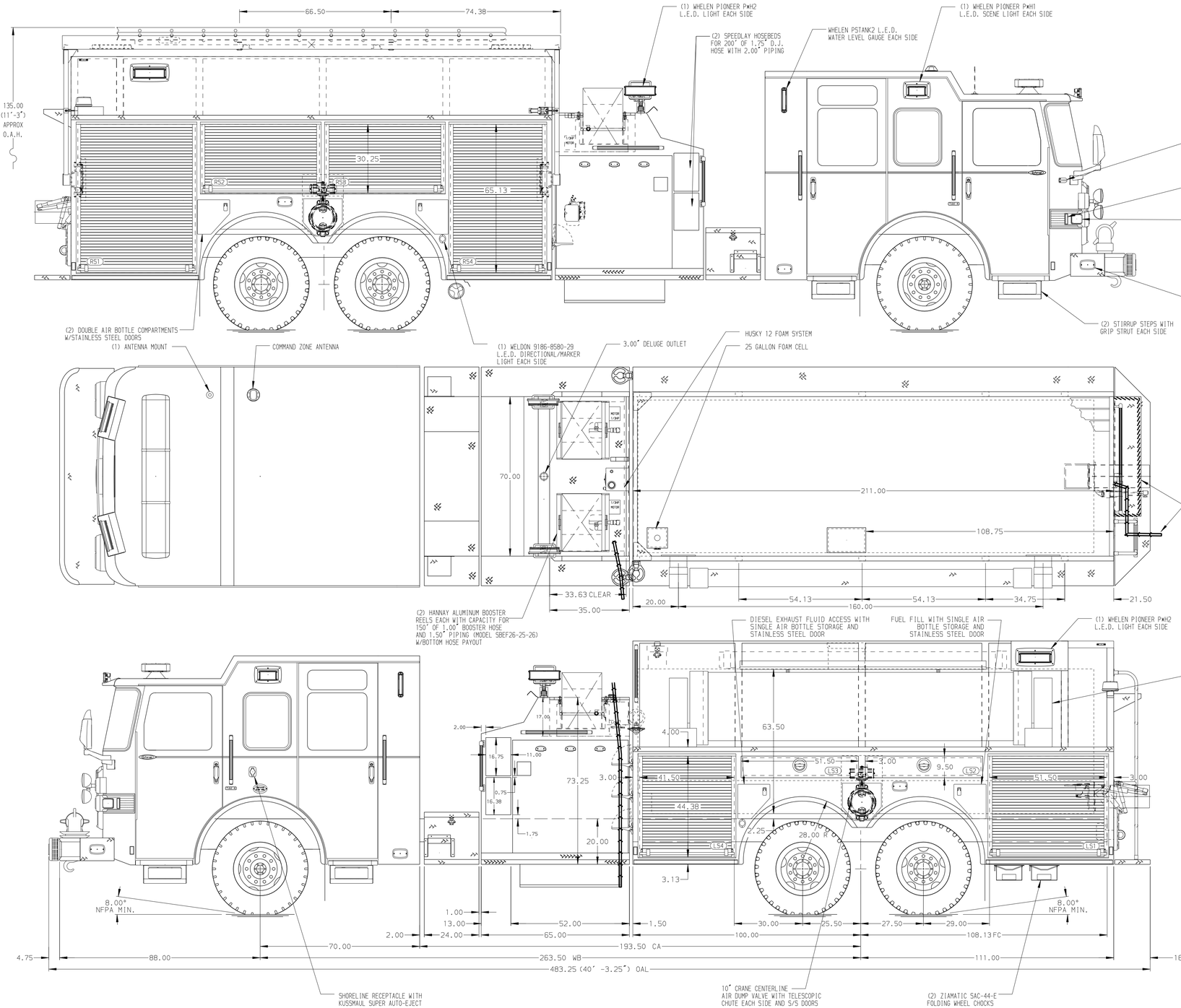

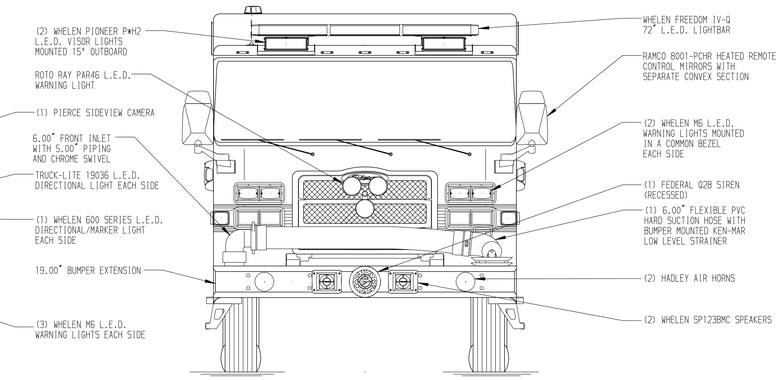

HOSEBED CAPACITIES
1. 800' OF 2.50" D.J. POLY HOSE
2. 1000' OF 4.00" LDH

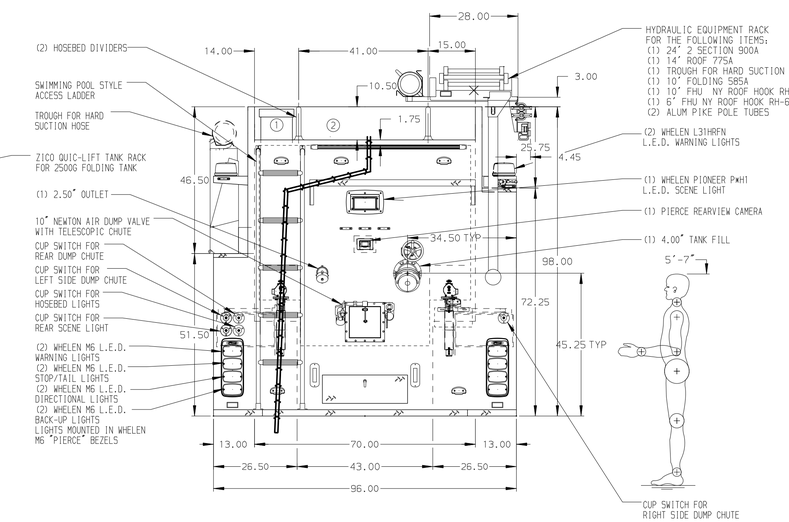

ALUMINUM BODY

SIDE ROLL AND FRONTAL IMPACT PROTECTION

NOTE

DIMENSIONS SHOWN ARE APPROXIMATE AND ARE SUBJECT TO MINOR DEVIATIONS AS MAY OCCUR OR BE NECESSARY IN CONSTRUCTION.
MINOR DETAILS NOT SHOWN.

1. AIR INLET WITH DISCONNECT COUPLING LOCATED FORWARD IN DS STEP WELL
2. BATTERY CHARGER LOCATED HIGH ON LEFT WALL OF COMPARTMENT LS4
3. BATTERY CHARGER INDICATOR LOCATED ON DRIVER'S SEAT RISER
4. DUAL L.E.D. LIGHT STRIPS LOCATED IN HOSE BED

REV	DATE	BY	CH
7	16MAY25	KLE	ZWE
6	03DEC24	KLE	ZWE
5	16OCT24	KLE	ZWE
4	31JUL24	JJB	WKL

CHASSIS DATA
MAKE: PIERCE
MODEL: ENFORCER

Pierce MANUFACTURING INC.

TITLE: 1500GPM, 3000G TANK, 2975G WATER, 25G FOAM 211" 2G TANKER, MUX
FOR: DUNDEE FIRE DEPARTMENT, DUNDEE, MICHIGAN
DWG NO.: 39075AD

JOB NO.	39075
SCALE	1:24
DATE	
DRAWN BY	KLE 22JUL24
CHECKED BY	WKL 22JUL24
SHEET SIZE	D
SHEET NO.	1 OF 1

View File Created 16-MAY-2025 13:20:01