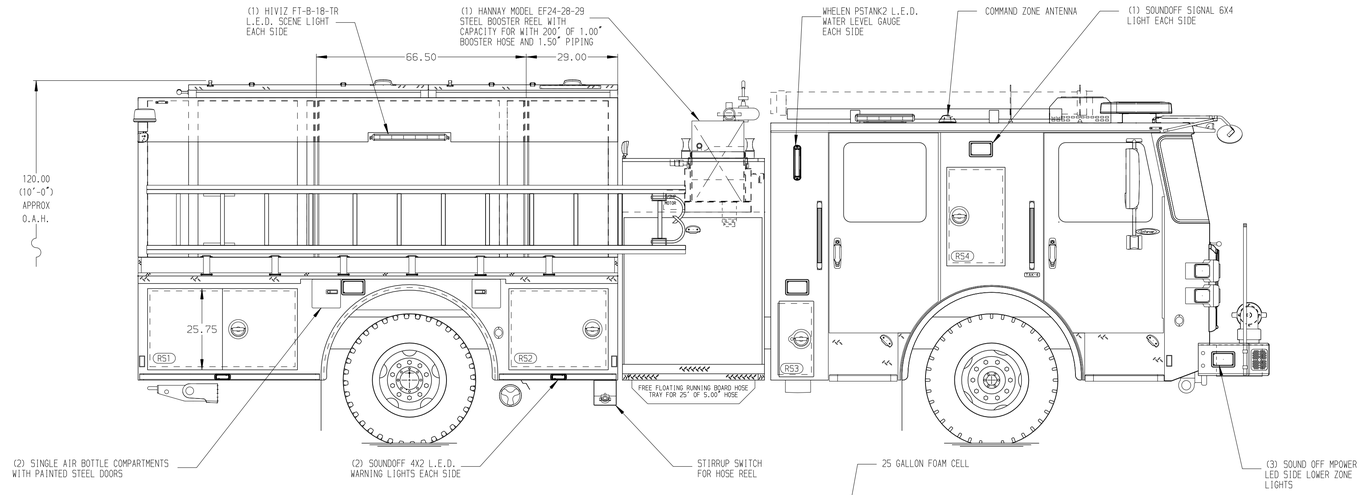

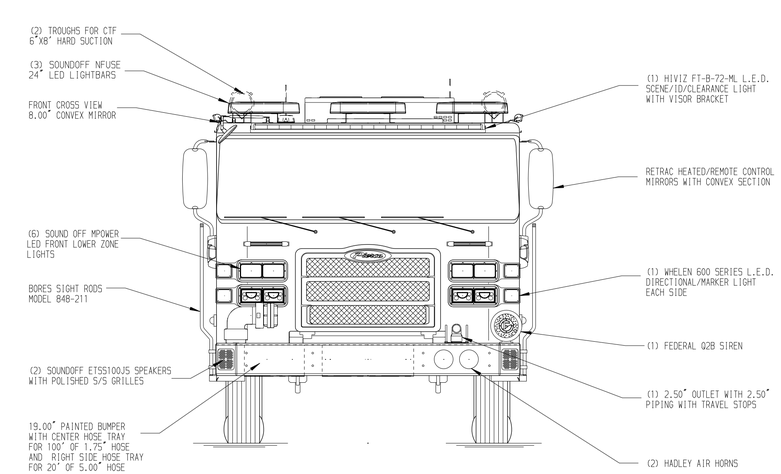

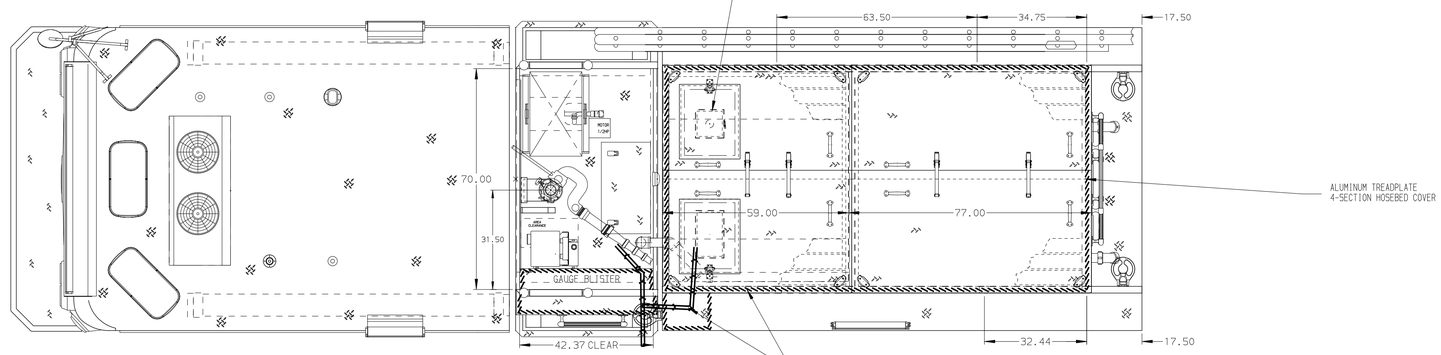

HOSEBED CAPACITIES

1 - 200' OF 1.75" D.J. POLY HOSE
2 - 300' OF 1.75" D.J. POLY HOSE
3 - 1000' OF 5.00" D.J. POLY HOSE
4 - 400' OF 2.00" D.J. POLY HOSE
5 - 300' OF 2.50" D.J. POLY HOSE (ABOVE)
WITH 300' OF 3.00" D.J. POLY HOSE (BELOW)

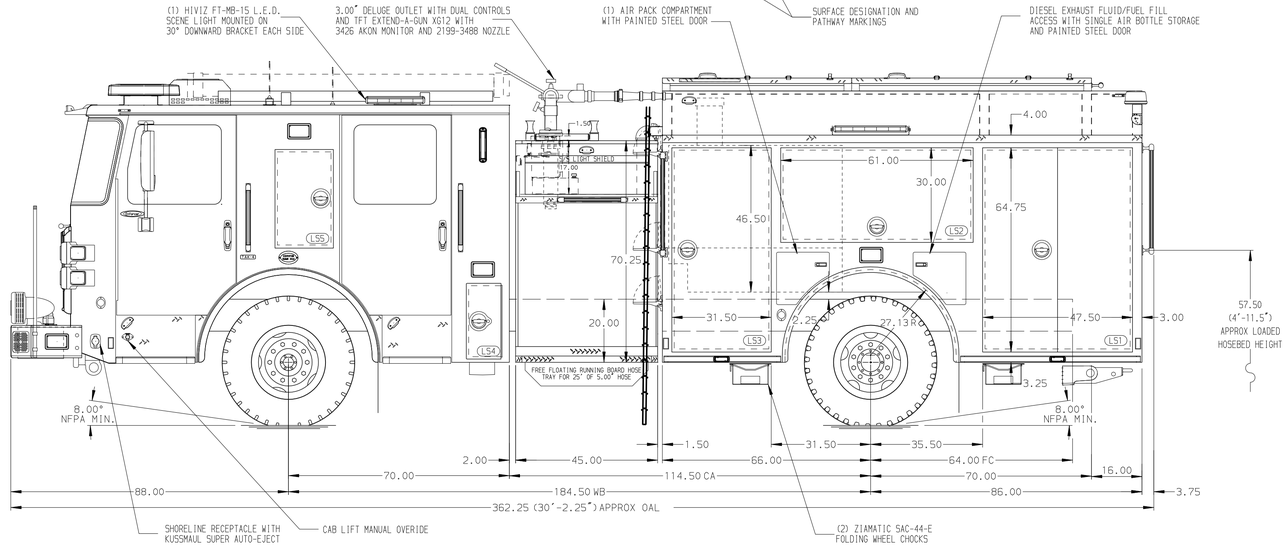

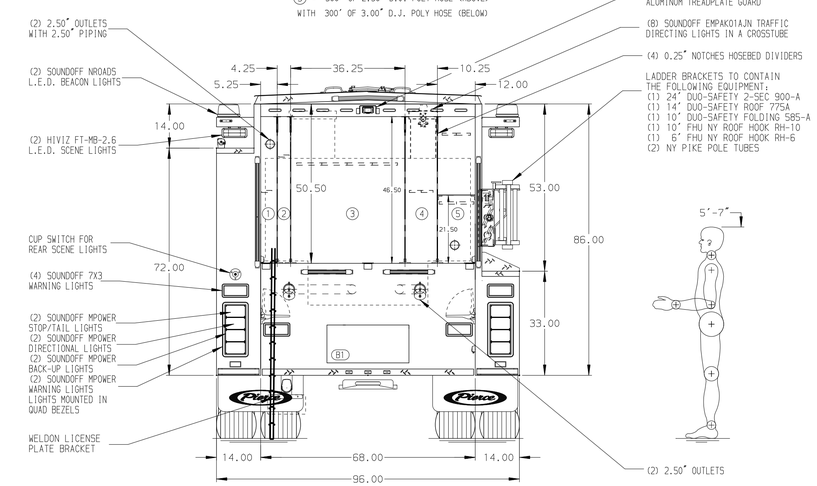

ALUMINUM BODY

NOTE

DIMENSIONS SHOWN ARE APPROXIMATE AND ARE SUBJECT TO MINOR DEVIATIONS AS MAY OCCUR OR BE NECESSARY IN CONSTRUCTION.
MINOR DETAILS NOT SHOWN.

1. ALUMINUM 4-WAY ON CAB ROOF
2. BATTERY CHARGE INDICATOR LOCATED NEAR DRIVER'S SEAT RISER WITH BRACKET
3. AIR OUTLET WITH SHUT OFF VALVE LOCATED ON DS PUMP PANEL
4. HUSKY 3 FOAM SYSTEM

REV	DATE	BY	CH
F	05DEC25	KLE	EGO
E	04DEC24	JJB	EGO
D	03DEC24	JJB	EGO
C	16OCT24	JJB	EGO
B	11OCT24	JJB	EGO

CHASSIS DATA
MAKE: PIERCE
MODEL: ENFORCER

Pierce MANUFACTURING INC.

TITLE: 1500 GPM, 525G TANK, 500G WATER, 25G FOAM
152" 2G PUMPER, MUX

FOR: CITY OF NORTH MYRTLE BEACH
NORTH MYRTLE BEACH, SOUTH CAROLINA

DWG NO. 39078AD

JOB NO. 39078
SCALE 1:24
DATE
DRAWN BY JJB 25JUL24
CHECKED BY EGO 25JUL24
SHEET SIZE D
SHEET NO. 1 OF 1

View File Created 16-DEC-2024 13:10:29