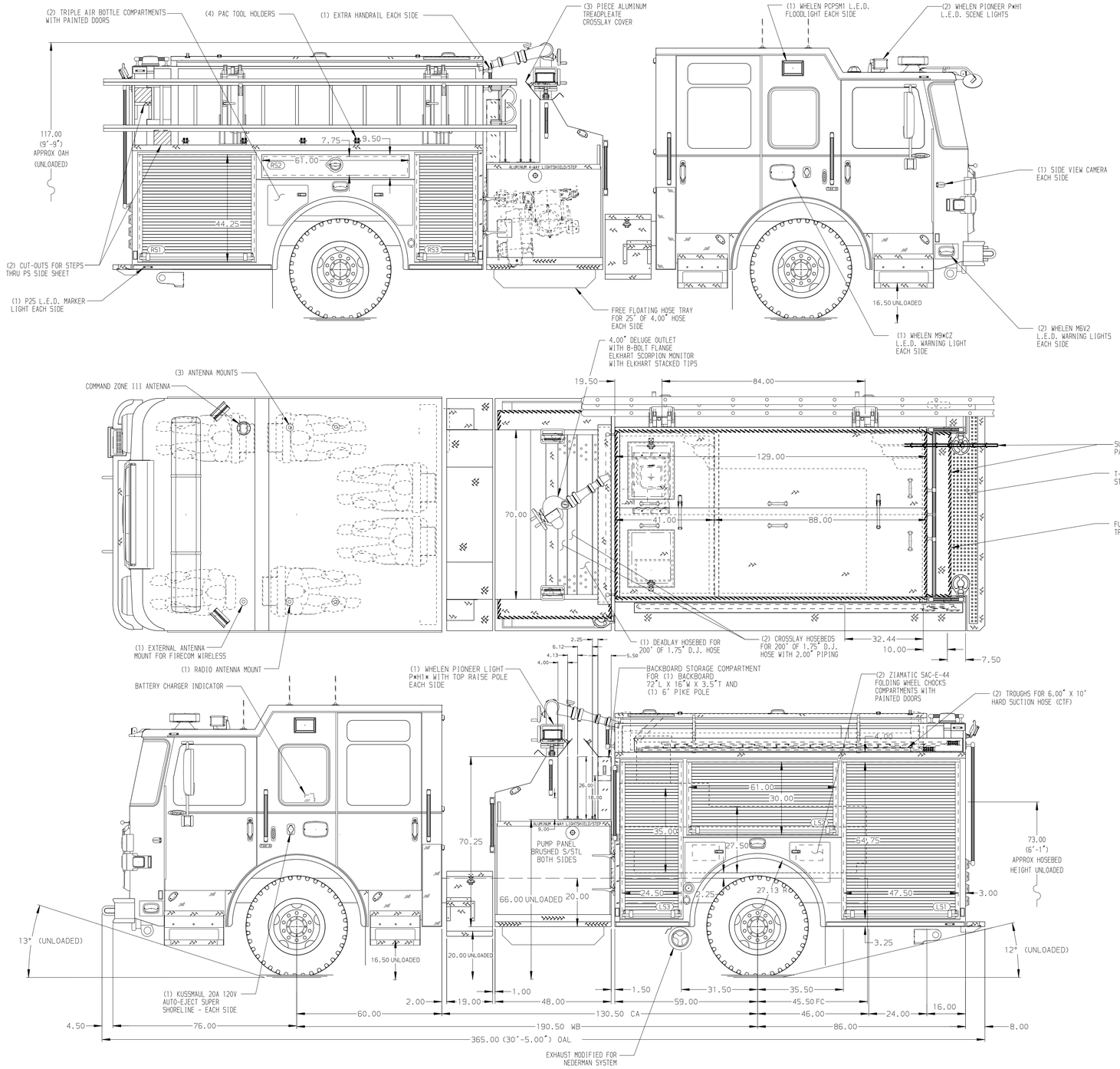


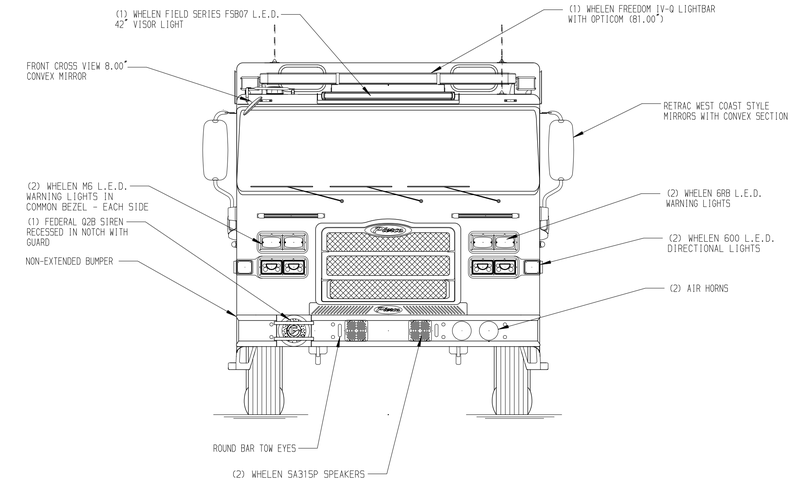


HOSEBED CAPACITIES

1. - 200' OF 2.50" HOSE
2. - 600' OF 2.50" HOSE
3. - 200' OF 2.50" HOSE
4. - 200' OF 1.75" HOSE
5. - 1000' OF 4.00" HOSE

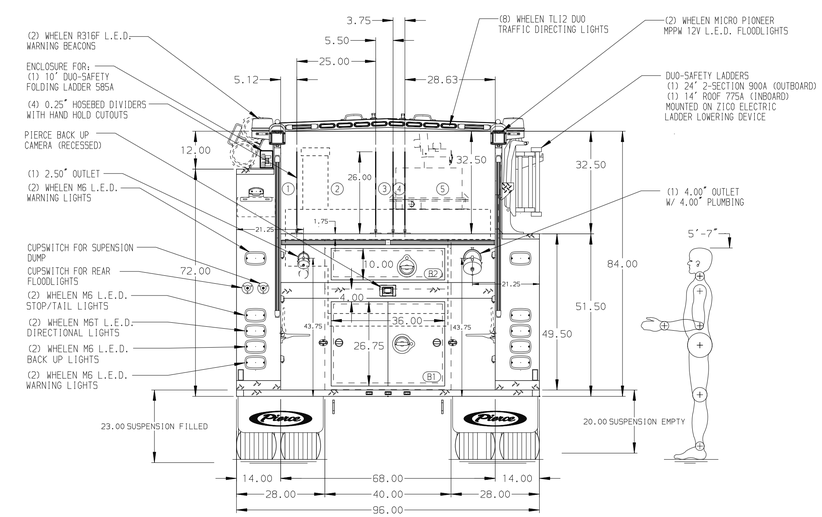


ALUMINUM BODY | MAXIMUM O.A.L. 366.00" | MAXIMUM O.A.H. 118.00" | REFERENCE: 38141

NOTE

DIMENSIONS SHOWN ARE APPROXIMATE AND ARE SUBJECT TO MINOR DEVIATIONS AS MAY OCCUR OR BE NECESSARY IN CONSTRUCTION.
MINOR DETAILS NOT SHOWN.

1. FOAMPRO 2002 SINGLE AGENT FOAM SYSTEM
2. AIR INLET/OUTLET WITH DISCONNECT FITTING LOCATED ON DRIVERS SEAT RISER
3. SMOOTH ALUMINUM GUARDS/SCUFFPLATE ON WATER AND FOAM DOMES
4. FOUR HOOKLOK HOLDERS SHIP LOOSE
5. BATTERY CHARGER LOCATED IN CAB BEHIND DRIVER'S SEAT

| REV | DATE | BY | CH |
|---|---|---|---|
| V | 16JAN25 | SAM | BSE |
| V | 18NOV24 | SAM | BSE |
| V | 27SEP24 | SAM | BSE |

CHASSIS DATA
MAKE: PIERCE
MODEL: ENFORCER

Pierce MANUFACTURING INC.

TITLE: 1500GPM, 500G TANK, 500G WATER, 10G FOAM TANK 145" PUMPER, MUX
FOR: CITY OF SEATTLE SEATTLE, WASHINGTON
DWG NO.: 39116AD-SH1

| JOB NO. | 39116 01-02 |
|---|---|
| SCALE | 1:24 |
| DATE | |
| DRAWN BY | SAM 23SEP24 |
| CHECKED BY | BSE 23SEP24 |
| SHEET SIZE | D |
| SHEET NO. | 1 OF 2 |

View File Created 16-JAN-2025 14:11:47