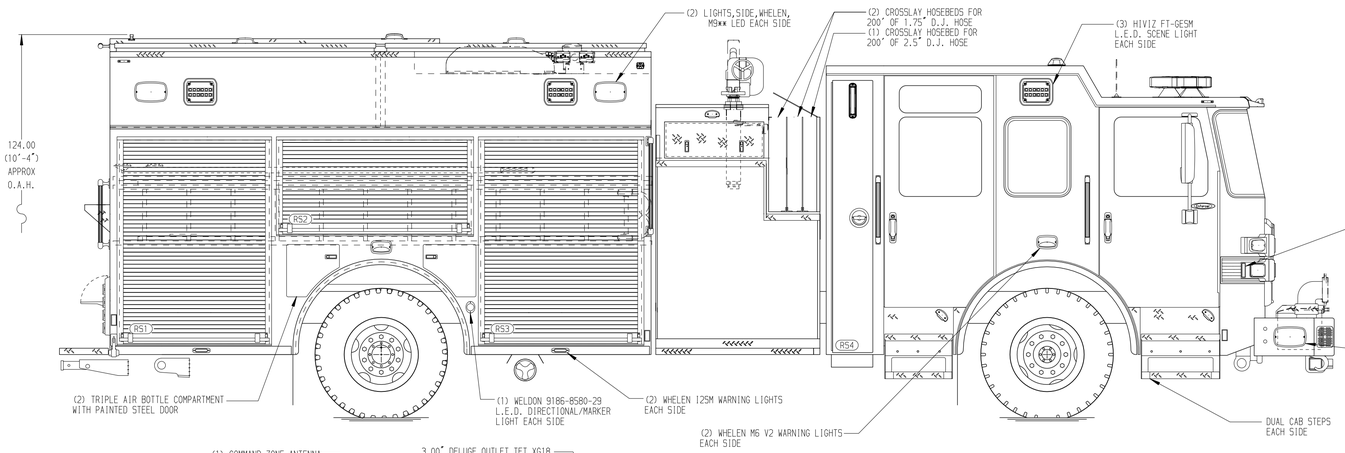

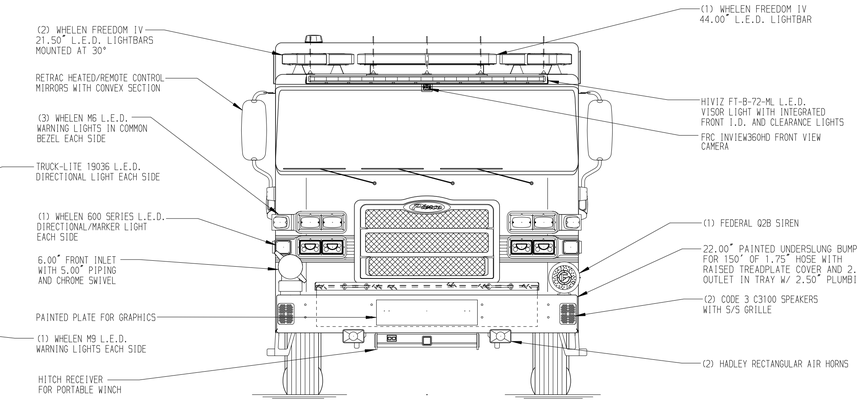

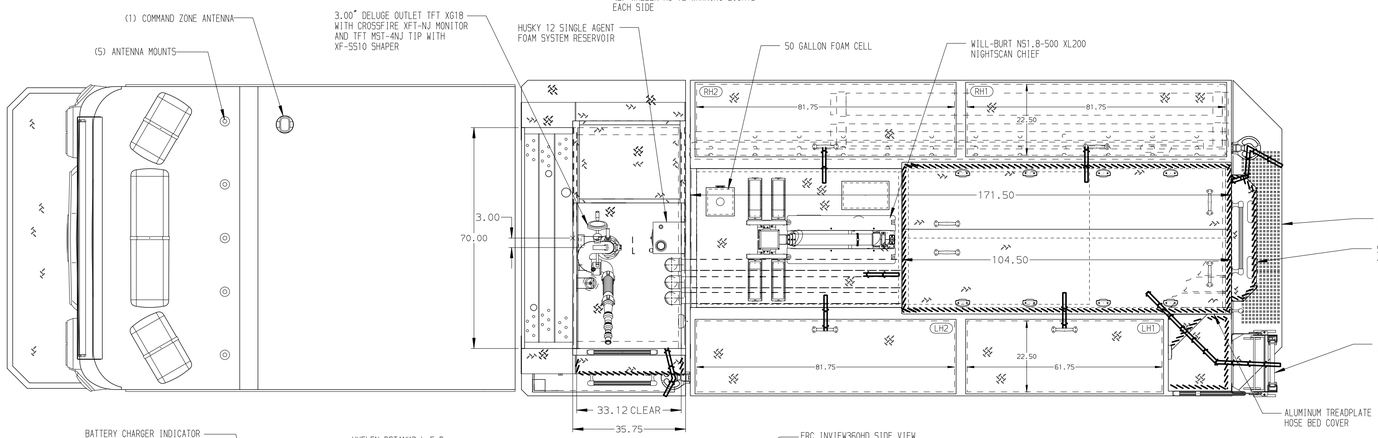

HOSEBED CAPACITIES

1. 300' OF 1.75" PONN SUPREME
2. 200' OF 1.75" PONN SUPREME
3. 400' OF 2.50" PONN SUPREME
4. 1200' OF 5.00" SNAP-TITE HFX HOSE

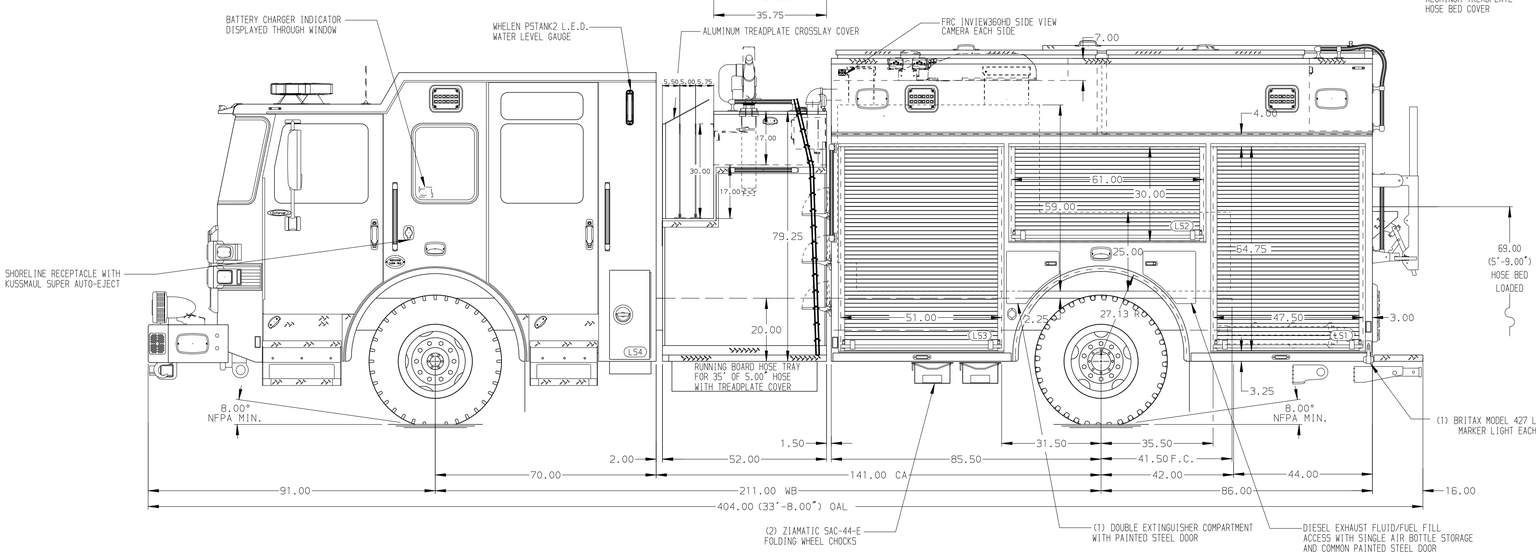

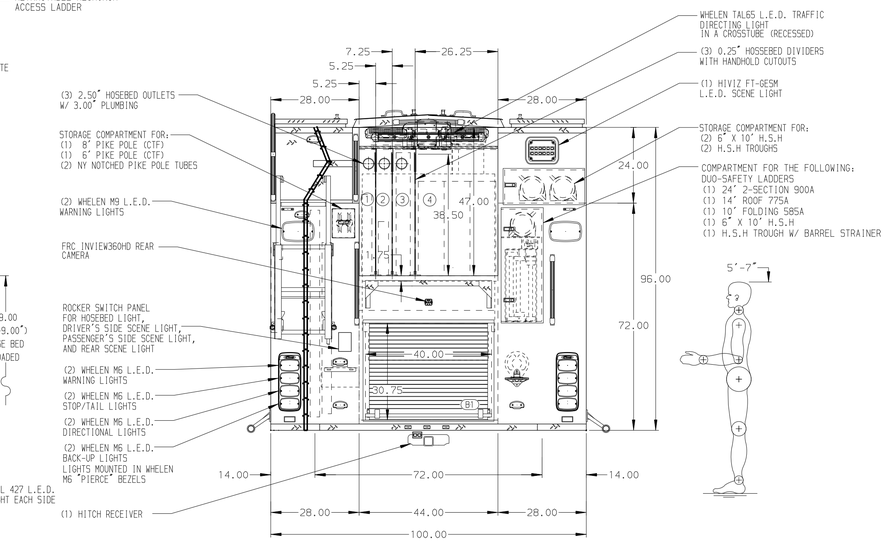

ALUMINUM BODY | MAXIMUM O.A.L. 404.00" | MAXIMUM O.A.H. 124.00" | SIDE ROLL AND FRONTAL IMPACT PROTECTION

NOTE

DIMENSIONS SHOWN ARE APPROXIMATE AND ARE SUBJECT TO MINOR DEVIATIONS AS MAY OCCUR OR BE NECESSARY IN CONSTRUCTION.
MINOR DETAILS NOT SHOWN.

1. ONSPOT AUTOMATIC TIRE CHAINS TO BE PROVIDED AT REAR
2. AIR OUTLET WITH SHUT-OFF VALVE LOCATED DS PUMP PANEL
3. BATTERY CHARGER LOCATED BEHIND DRIVER'S SEAT
4. LITTLE GIANT VELOCITY MODEL 13 15413-001 LOCATED IN LS1

REV	DATE	BY	CH
V	21NOV24	LST	COS
V	24OCT24	LST	COS
V	21AUG24	LST	SJS

CHASSIS DATA
MAKE: PIERCE
MODEL: ENFORCER

Pierce MANUFACTURING INC.

TITLE: 2000 GPM, 800G TANK, 750G WATER, 50G FOAM 171" 2G PUMPER, MUX
FOR: BEDMINSTER TOWNSHIP- FAR HILLS BEDMINSTER, NEW JERSEY
DWG NO.: 39153AD

JOB NO.	39153
SCALE	1:24
DATE	
DRAWN BY	SJM 31JUL24
CHECKED BY	SJS 31JUL24
SHEET SIZE	D
SHEET NO.	1 OF 1

View File Created 22-NOV-2024 14:47:50