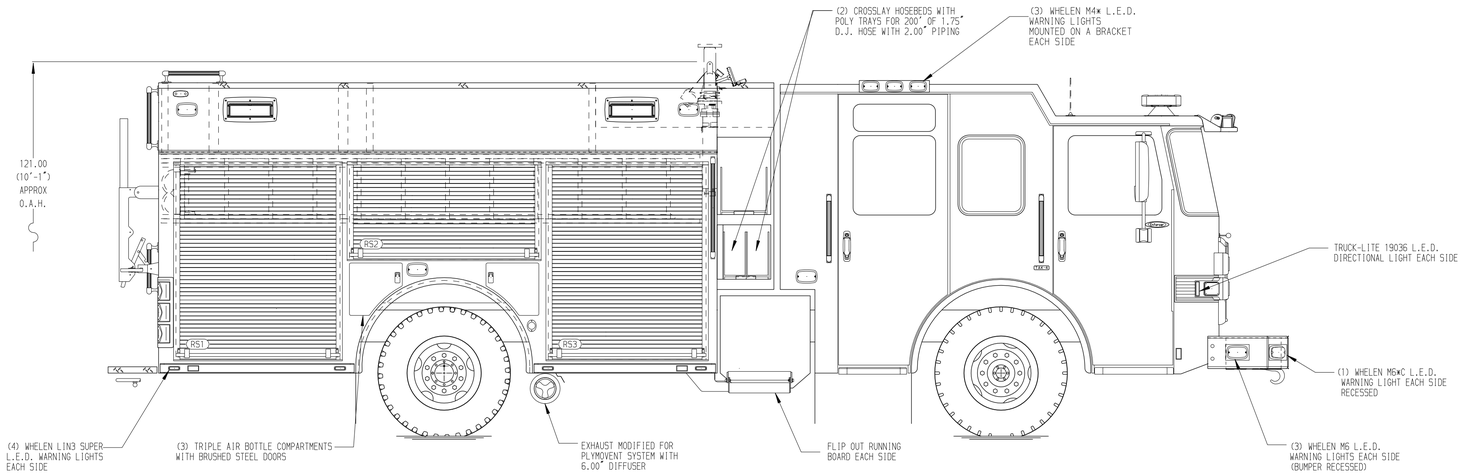

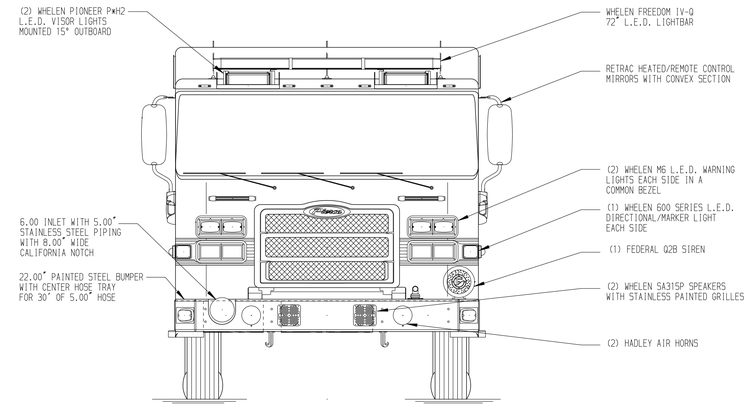

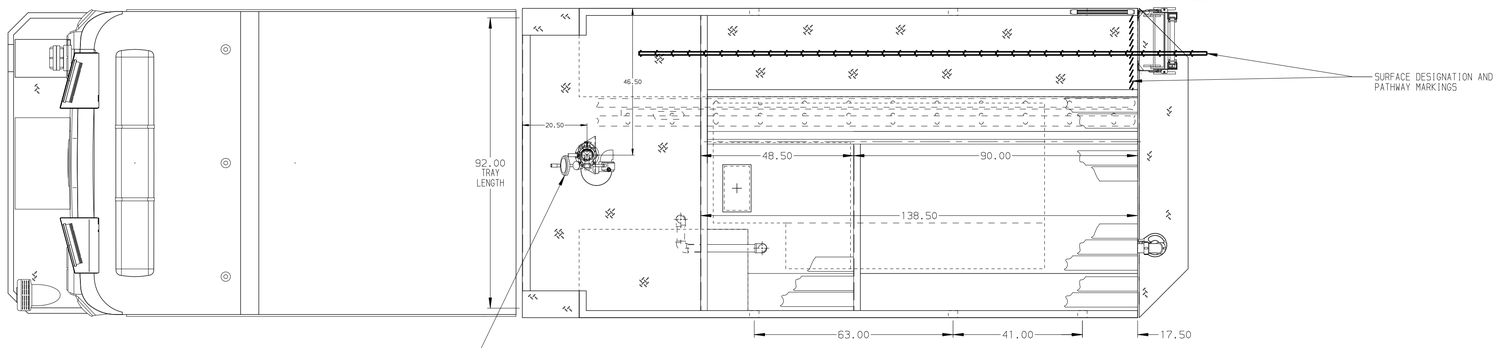

HOSEBED CAPACITIES

1. - 350' OF 2.50" D.J. POLY HOSE
2. - 800' OF 5.00" L.D NIEDNER HOSE
3. - 150' OF 1.75" D.J. POLY HOSE (ABOVE)
   - 500' OF 2.50" D.J. POLY HOSE (BELOW)
4. - 450' OF 2.50" D.J. POLY HOSE

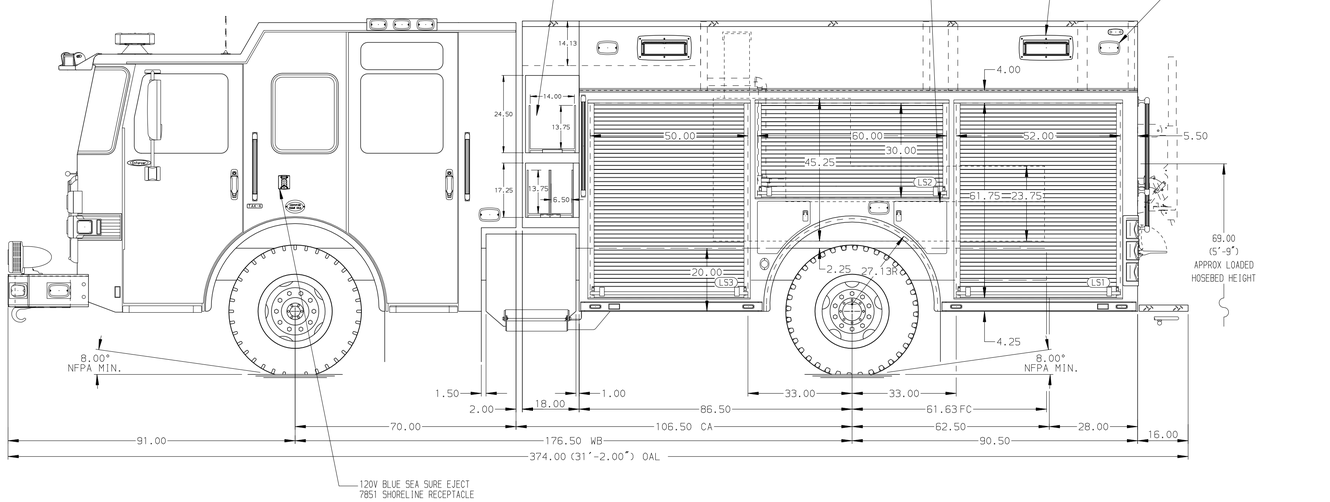

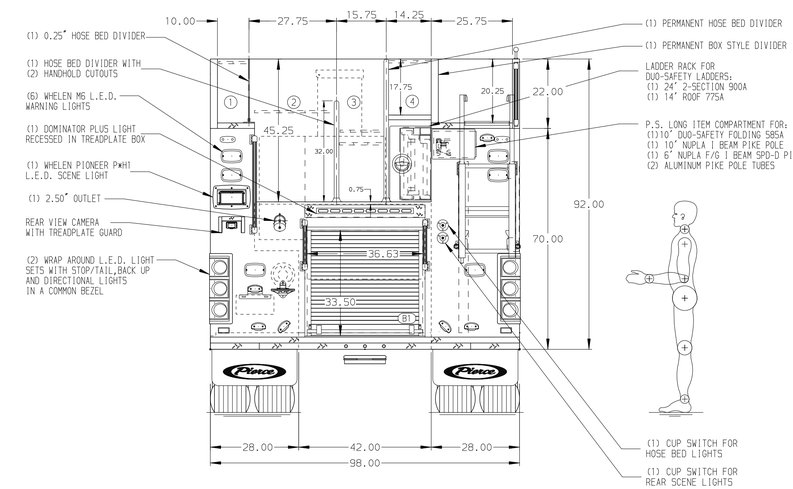

ALUMINUM BODY

NOTE

DIMENSIONS SHOWN ARE APPROXIMATE AND ARE SUBJECT TO MINOR DEVIATIONS AS MAY OCCUR OR BE NECESSARY IN CONSTRUCTION.
MINOR DETAILS NOT SHOWN.

1. KUSSMAUL BATTER CHARGER LOCATED BEHIND DRIVER'S SEAT
2. BATTERY CHARGER INDICATOR LOCATED ON DRIVER'S SEAT RISER
3. AIR OUTLET WITH SHUT OFF VALVE LOCATED ON DS PUMP PANEL
4. WORDEN HWGY-SB SUPER GRIPPER WHEEL CHOCKS SHIPPED LOOSE

REV	DATE	BY	CH
B	27NOV24	JJB	GKH
A	02AUG24	JJB	CDU

CHASSIS DATA — MAKE: PIERCE — MODEL: ENFORCER

TITLE: 1500 GPM, 500G WATER TANK
177" 3G PUC PUMPER, HARD WIRED

FOR: CITY OF STERLING HEIGHTS FIRE DEPARTMENT
STERLING HEIGHTS, MICHIGAN

DWG NO.: 39160AD-SH1

Pierce MANUFACTURING INC.

JOB NO.	39160
SCALE	1:24
DATE	
DRAWN BY	JJB 29JUL24
CHECKED BY	CDU 29JUL24
SHEET SIZE	D
SHEET NO.	1 OF 2

View File Created 27-NOV-2024 13:59:08