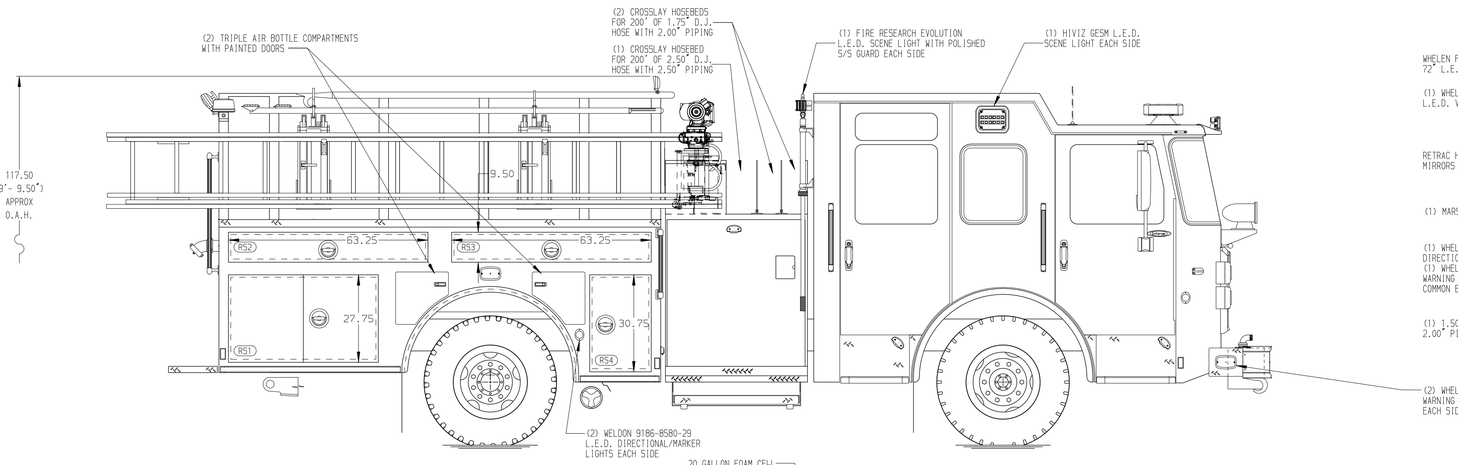

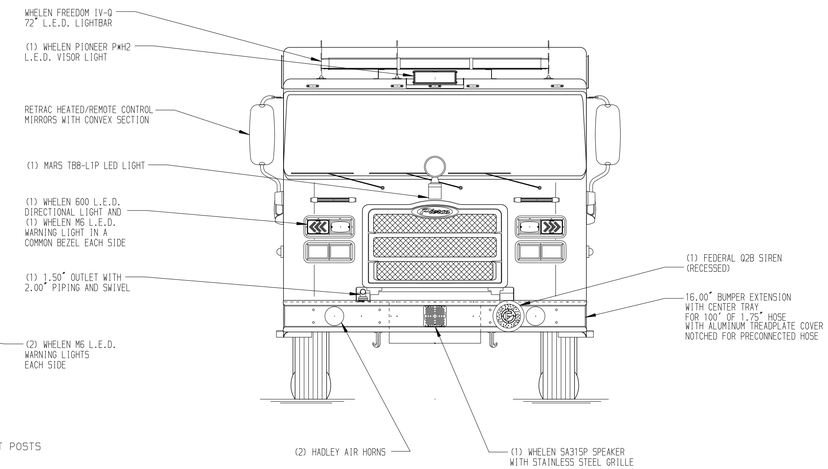

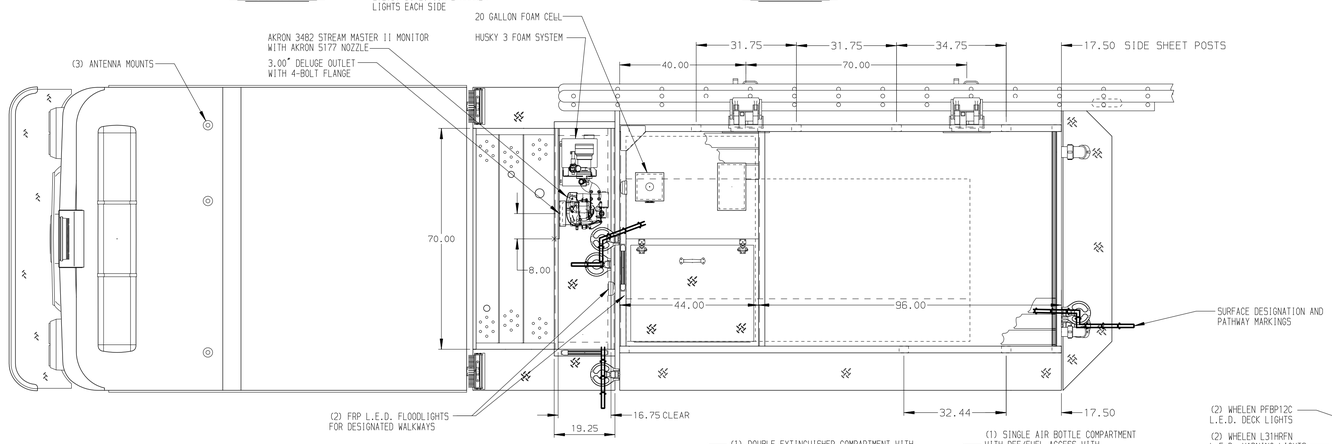

HOSEBED CAPACITIES

1. - 400' OF 2.50" HOSE
2. - 1200' OF 4.00" HOSE
3. - 500' OF 3.00" HOSE
4. - 500' OF 3.00" HOSE
5. - OPEN HOSE BED

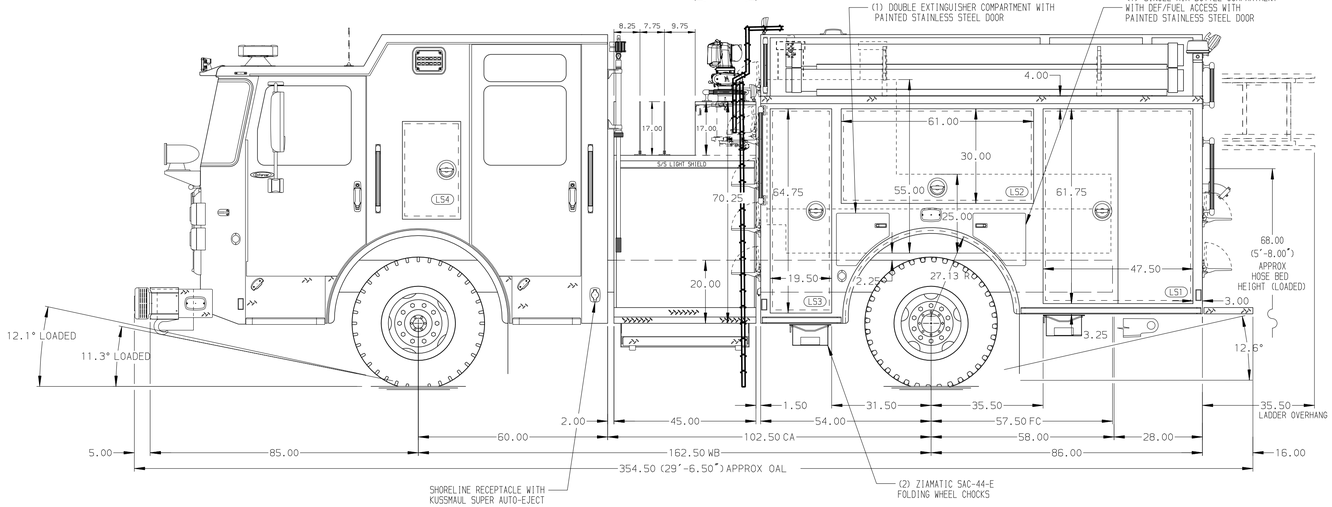

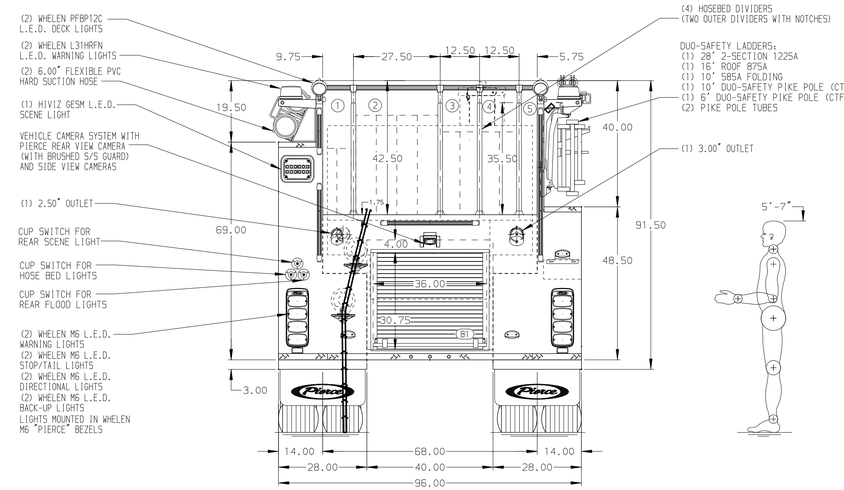

ALUMINUM BODY

SIDE ROLL AND FRONTAL IMPACT PROTECTION

NOTE

DIMENSIONS SHOWN ARE APPROXIMATE AND ARE SUBJECT TO MINOR DEVIATIONS AS MAY OCCUR OR BE NECESSARY IN CONSTRUCTION.
MINOR DETAILS NOT SHOWN.

1. BATTERY CHARGER LOCATED IN COMPARTMENT PER ORDER
2. BATTERY CHARGER INDICATOR LOCATED ON DRIVER'S SEAT RISER
3. DUAL L.E.D. LIGHT STRIPS LOCATED IN HOSE BED
4. AIR INLET/OUTLET WITH DISCONNECT FITTING AND 1/4 TURN VALVE LOCATED ON DS PUMP PANEL

REV	DATE	BY	CH
V	07NOV24	BTH	TDC
V	17JUL24	BTH	JKR
B	11JUN24	BTH	JKR
V	07JUN24	BTH	JKR

CHASSIS DATA — MAKE: PIERCE — MODEL: ENFORCER

Pierce MANUFACTURING INC.

TITLE: 1500GPM, 750G TANK, 730G WATER, 20G FOAM 140" PUMPER WITH 3" RAISED REAR, HARDWIRED

FOR: SODDY DAISY FIRE DEPARTMENT, SODDY-DAISY, TENNESSEE

DWG NO.: 39184AD

JOB NO.	39184 01-02
SCALE	1:24
DATE	
DRAWN BY	BTH 15APR24
CHECKED BY	EGO 17APR24
SHEET SIZE	D
SHEET NO.	1 OF 1

View File Created 16-DEC-2024 12:01:04