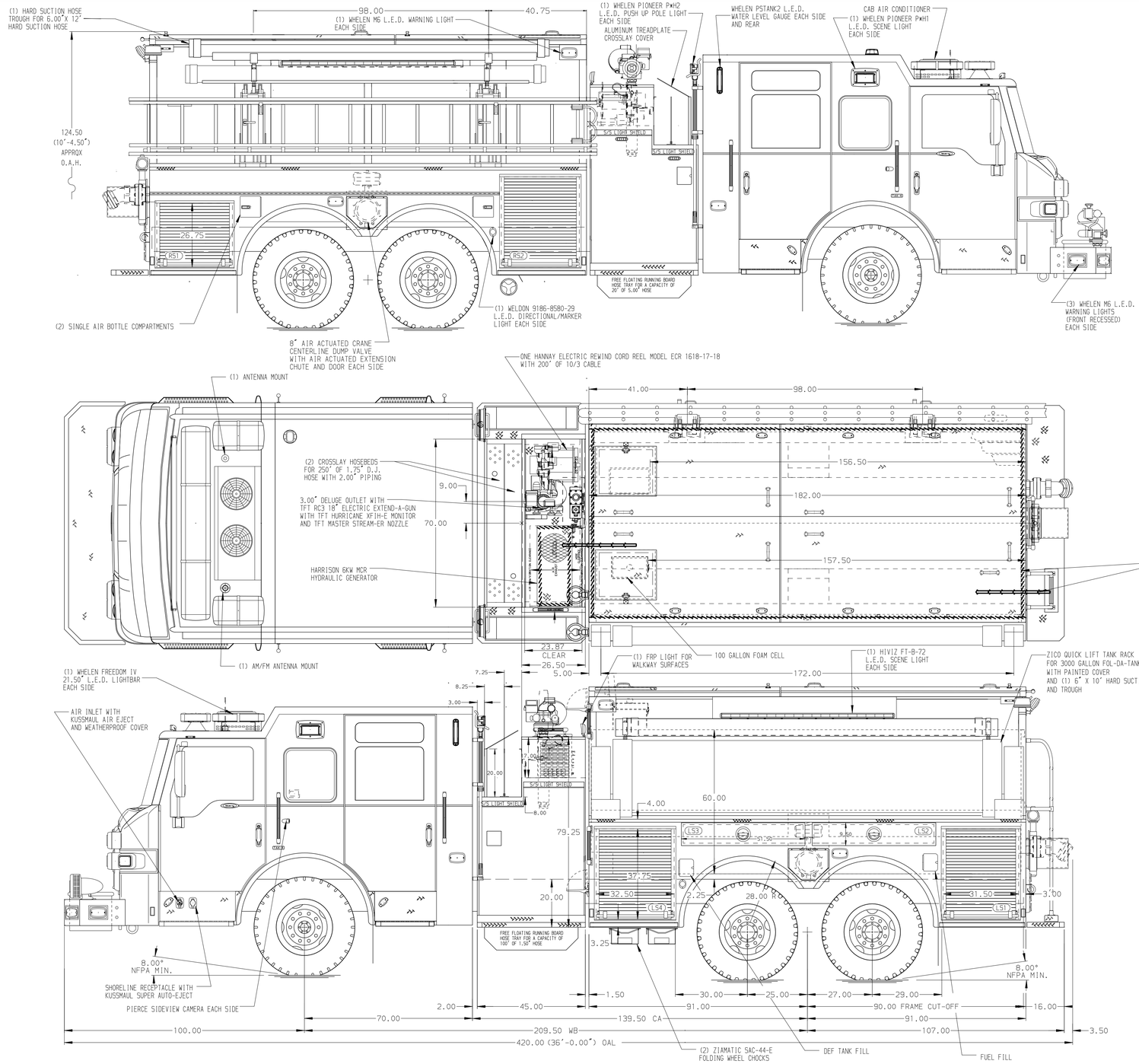


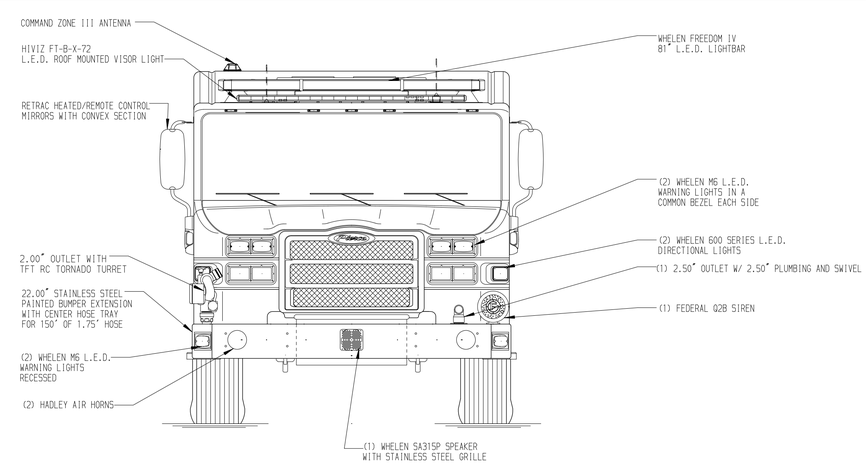


HOSEBED CAPACITIES

1. 300' OF 3.00" D.J. POLY HOSE
2. 1000' OF 5.00" D.J. POLY HOSE
3. 300' OF 3.00" D.J. POLY HOSE

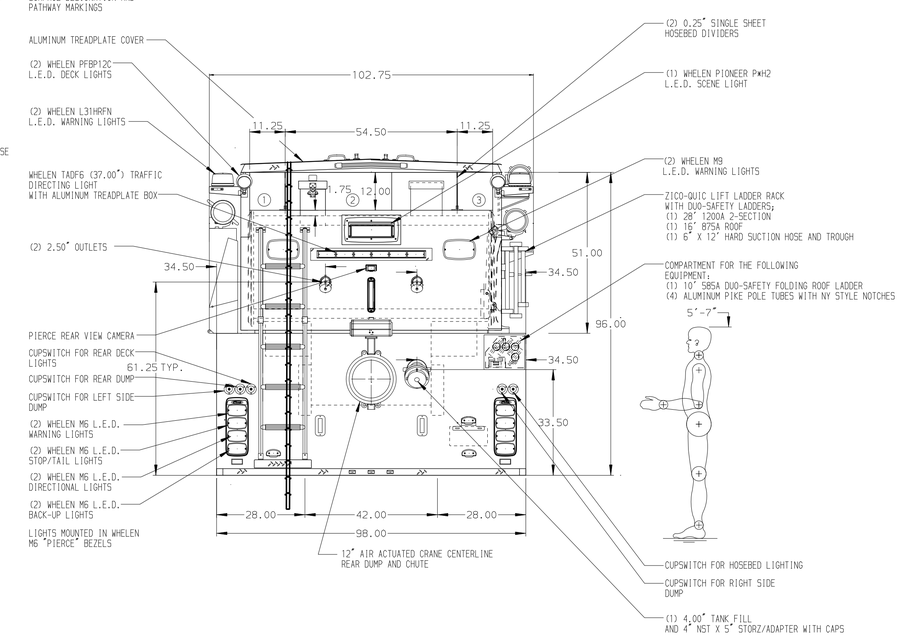


STAINLESS STEEL BODY

MAXIMUM O.A.H. 128.00"

SIDE ROLL AND FRONTAL IMPACT PROTECTION

NOTE

DIMENSIONS SHOWN ARE APPROXIMATE AND ARE SUBJECT TO MINOR DEVIATIONS AS MAY OCCUR OR BE NECESSARY IN CONSTRUCTION.
MINOR DETAILS NOT SHOWN.

1. BATTERY CHARGER INDICATOR BEHIND DRIVER'S SEAT DISPLAYED THROUGH WINDOW

| REV | DATE | BY | CH | |
|---|---|---|---|---|
| 7 | 21JUL25 | LST | PHA | CHASSIS DATA |
| 6 | 10MAR25 | LST | PHA | |
| 5 | 14JAN25 | LST | PHA | MAKE |
| 4 | 07NOV24 | LST | PHA | PIERCE |
| 3 | 11OCT24 | LST | EGO | MODEL |
| | | | | VELOCITY FR |

**Pierce MANUFACTURING INC.**

TITLE: 1250 GPM, 2600 GAL TANK, 2500 GAL WATER, 30 GAL FOAM 182" DRY SIDE BODY, VELOCITY ESP ELECTRICAL SYSTEM

FOR: MIDDLEBURY VOLUNTEER FIRE DEPARTMENT
MIDDLEBURY, CONNCECTICUT

DWG NO. 39185AD-SH1

| JOB NO. | 39185 |
|---|---|
| SCALE 1:24 | DATE |
| DRAWN BY LST | 30SEP24 |
| CHECKED BY PHA | 03OCT24 |
| SHEET SIZE D | SHEET NO. 1 OF 1 |

View File Created 21-JUL-2025 12:33:45