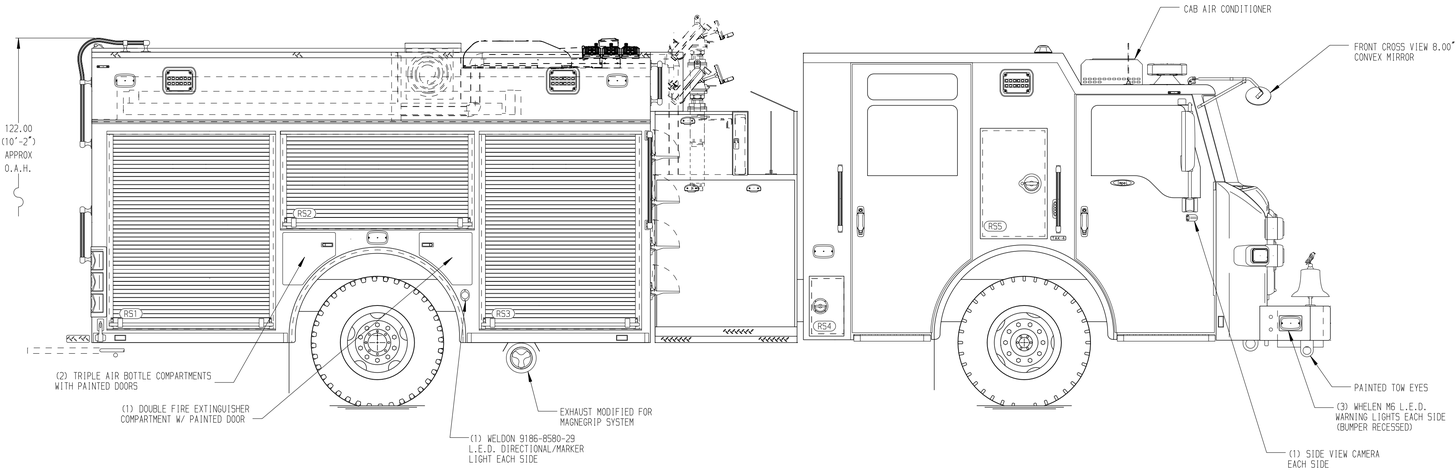

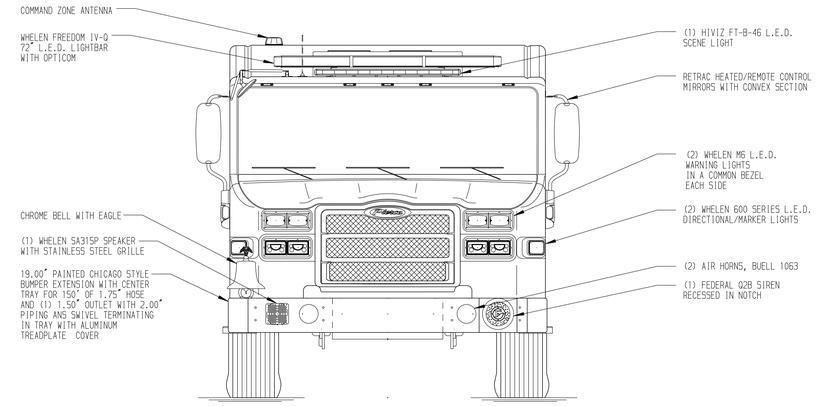

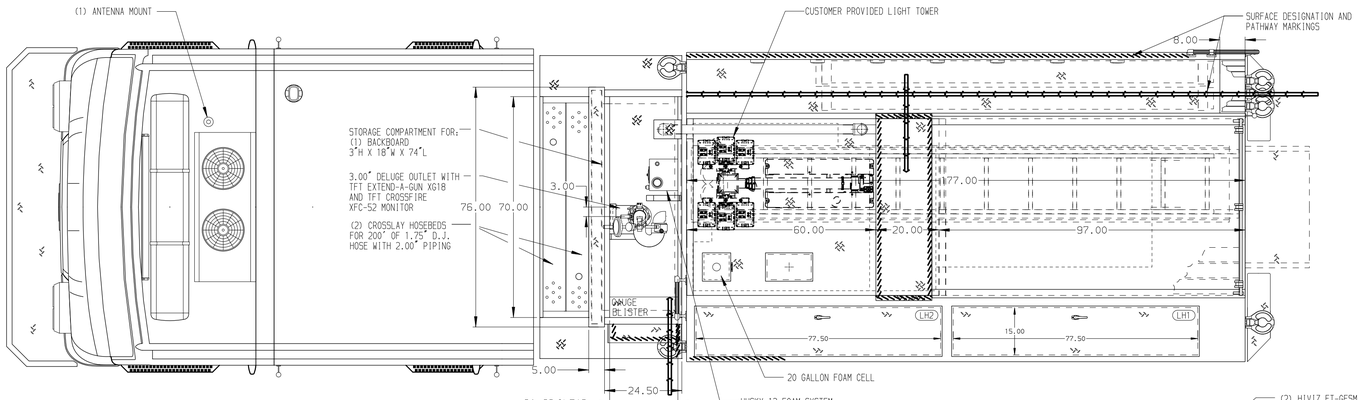

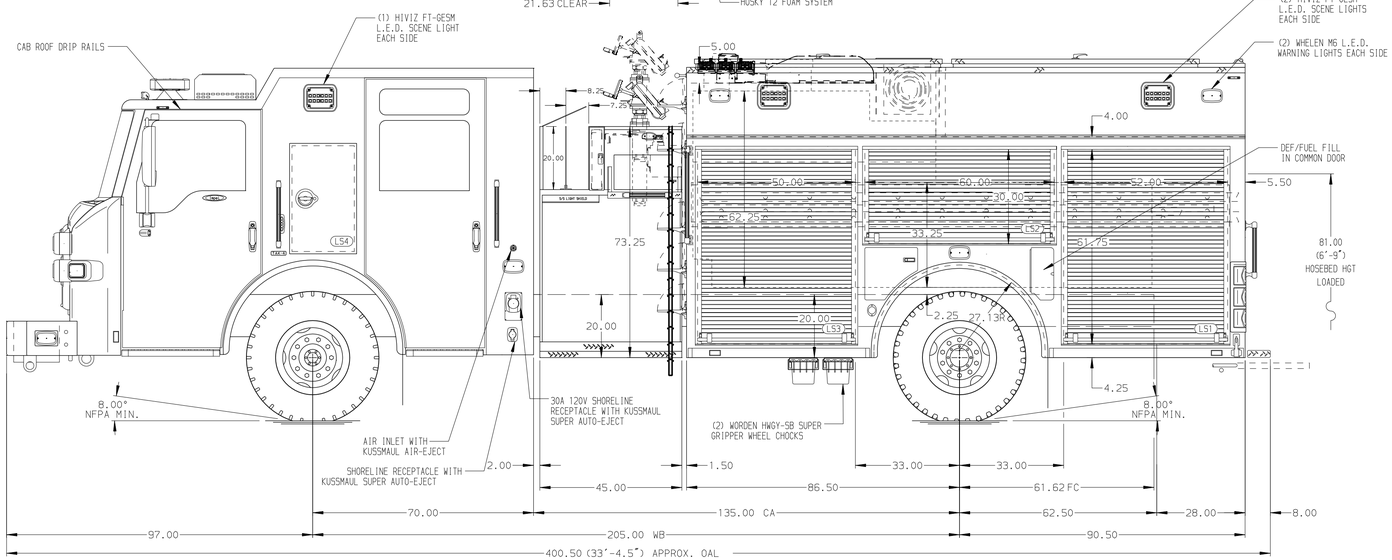

HOSEBED CAPACITIES

1. 200' OF 2.50" D.J. POLY HOSE
2. 800' OF 5.00" D.J. POLY HOSE
3. 600' OF 2.50" D.J. POLY HOSE
4. 200' OF 1.75" D.J. POLY HOSE

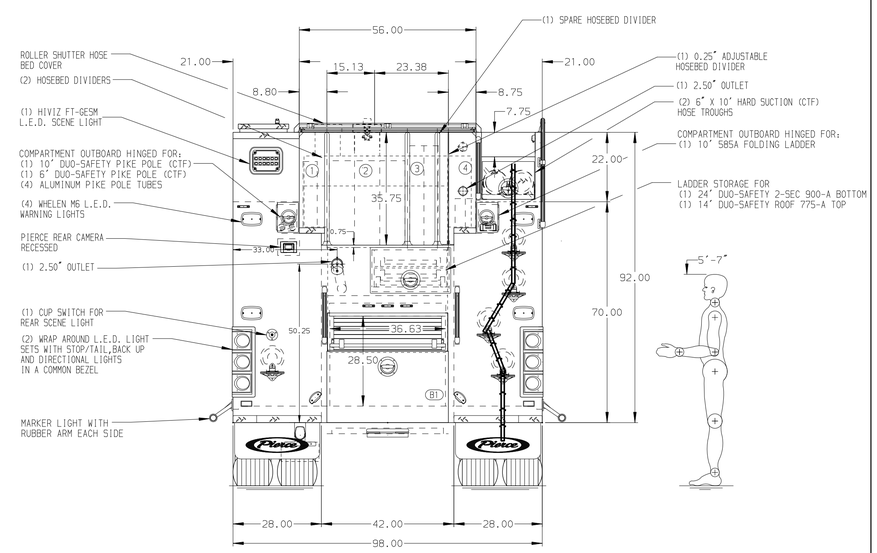

ALUMINUM BODY

NOTE

DIMENSIONS SHOWN ARE APPROXIMATE AND ARE SUBJECT TO MINOR DEVIATIONS AS MAY OCCUR OR BE NECESSARY IN CONSTRUCTION.
MINOR DETAILS NOT SHOWN.

1. DUAL L.E.D. LIGHT STRIPS LOCATED IN HOSE BED
2. BATTERY CHARGER LOCATED IN COMPARTMENT L53
3. SUB FEED BREAKER BOX LOCATED IN COMPARTMENT L53

REV	DATE	BY	CH
7	14JAN25	JAM	GKH
6	02JAN25	JAM	GKH
5	30OCT24	JAM	GKH
4	27SEP24	JAM	GKH

CHASSIS DATA
MAKE: PIERCE
MODEL: IMPEL FR

Pierce MANUFACTURING INC.

TITLE: 1500 GPM, 850G TANK, 830G WATER, 20G FOAM 177" HDRP, MUX
FOR: CORVALLIS FIRE DEPARTMENT CORVALLIS, OREGON
DWG NO. 39229AD-SH1

JOB NO. 39229
SCALE 1:24
DATE
DRAWN BY JAM 31JUL24
CHECKED BY SJS 31JUL24
SHEET SIZE D
SHEET NO. 1 OF 2

View File Created 17-JAN-2025 09:35:47