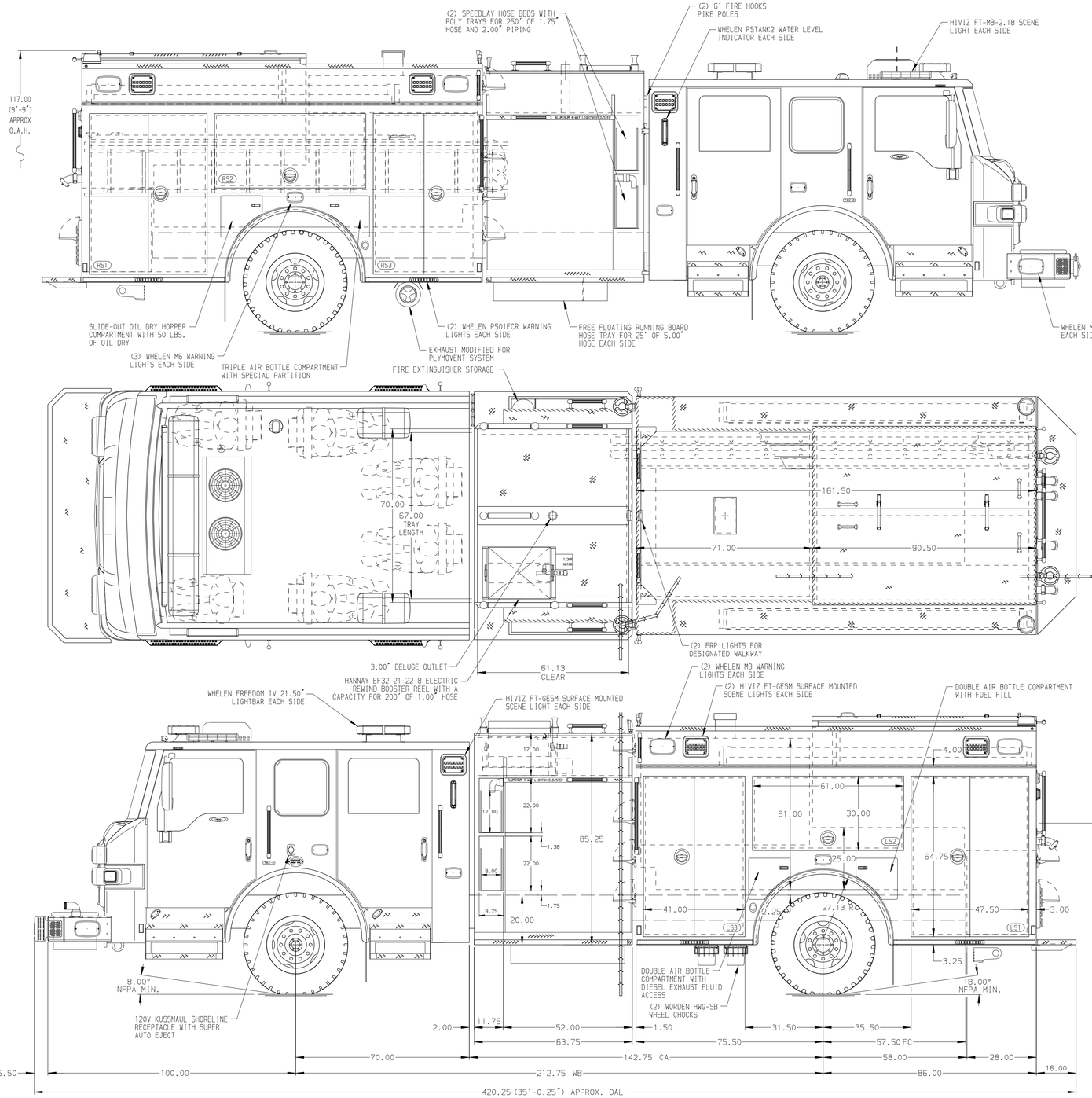

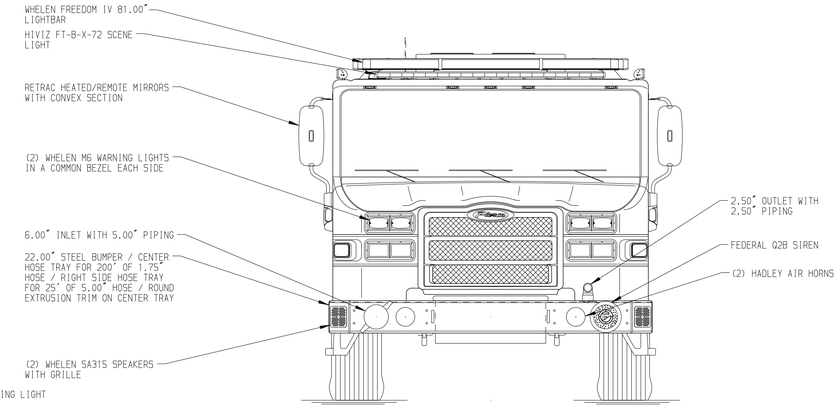

HOSEBED CAPACITIES

1. 500' OF 3.00" D.J. POLY HOSE
2. 1200' OF 5.00" D.J. POLY HOSE
3. 250' OF 2.50" D.J. POLY HOSE
4. 300' OF 1.75" D.J. POLY HOSE

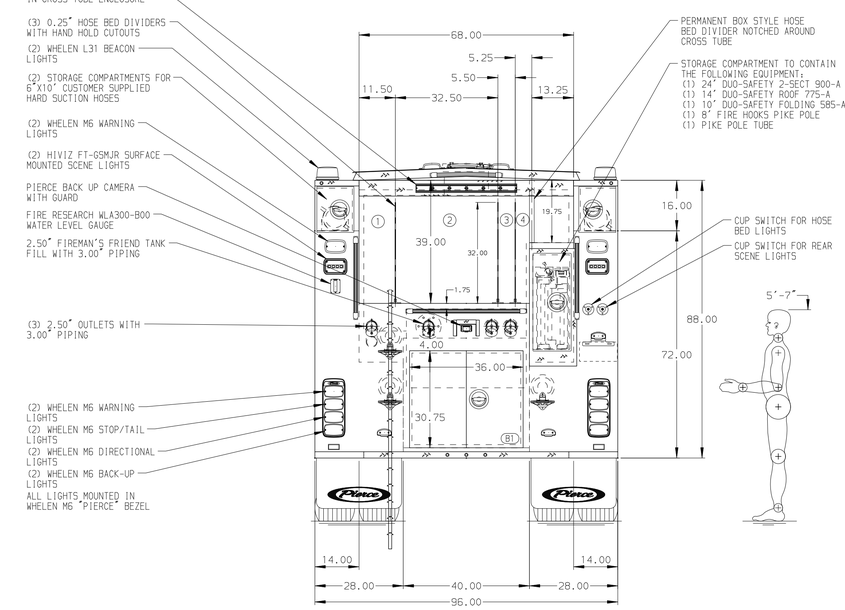

ALUMINUM BODY

SIDE ROLL AND FRONTAL IMPACT PROTECTION

NOTE

DIMENSIONS SHOWN ARE APPROXIMATE AND ARE SUBJECT TO MINOR DEVIATIONS AS MAY OCCUR OR BE NECESSARY IN CONSTRUCTION.
MINOR DETAILS NOT SHOWN.

1. AIR INLET WITH DISCONNECT FITTING LOCATED PER ORDER
2. BATTERY CHARGER INDICATOR LOCATED PER ORDER

REV	DATE	BY	CH
1	19NOV24	BST	CLM
2	14OCT24	BST	CLM
3	22AUG24	BST	CLM

CHASSIS DATA
MAKE: PIERCE
MODEL: IMPEL

Pierce MANUFACTURING INC.

TITLE: 1500GPM, 1000G WATER TANK 161" PUMPER BODY, MUX
FOR: WAKE COUNTY NC RALEIGH, NORTH CAROLINA
DWG NO.: 39238AD-SH1

JOB NO.	39238
SCALE	1:24
DATE	
DRAWN BY	BST 16AUG24
CHECKED BY	CLM 16AUG24
SHEET SIZE	D
SHEET NO.	1 OF 2

View File Created 10-DEC-2024 09:13:47