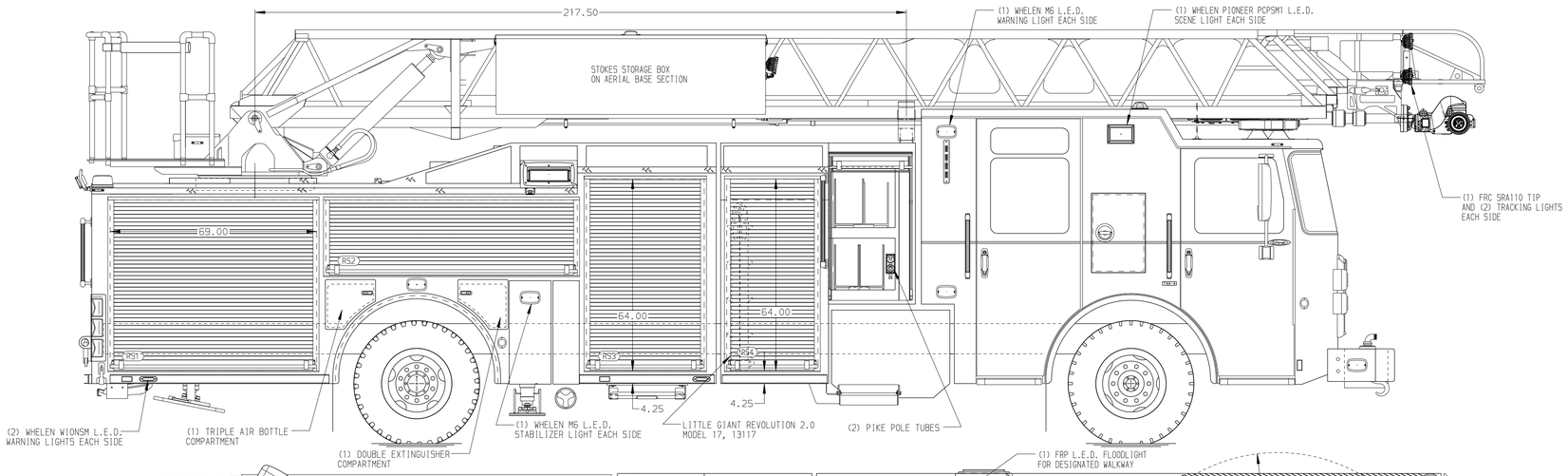

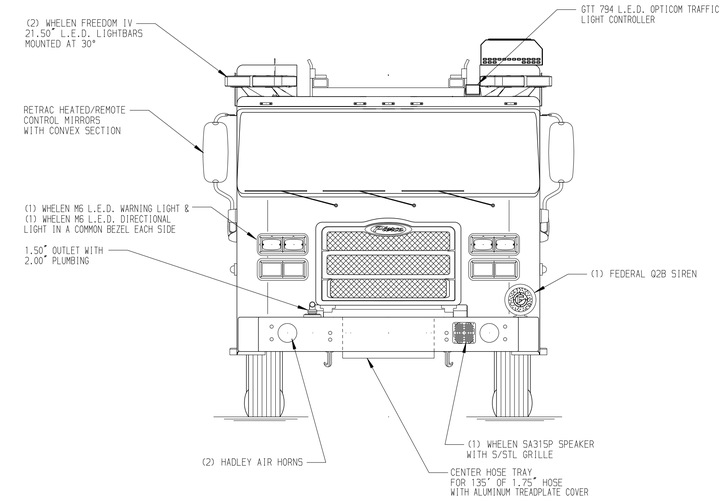

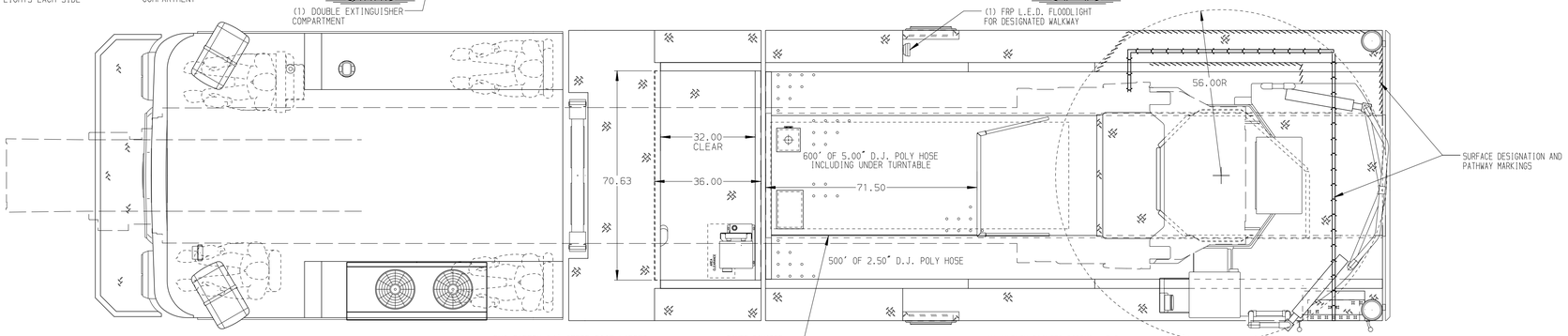

BODY	WATER TANK
107' ASL Aluminum Body PUC	500 Gallon Poly Water Tank
COMPT,LEFT SIDE FRONT	Foam System
Full Height Rollup Forward	Husky 3 Single Agent Foam System
COMPT,LEFT SIDE REAR	Foam Cell
Full Height Rollup Rearward	25 Gallon Foam Cell, Reduced Water, PUC
COMPT,RIGHT SIDE FRONT	
Full Height Rollup Forward	
COMPT,RIGHT SIDE REAR	
Full Height Rollup Rearward	

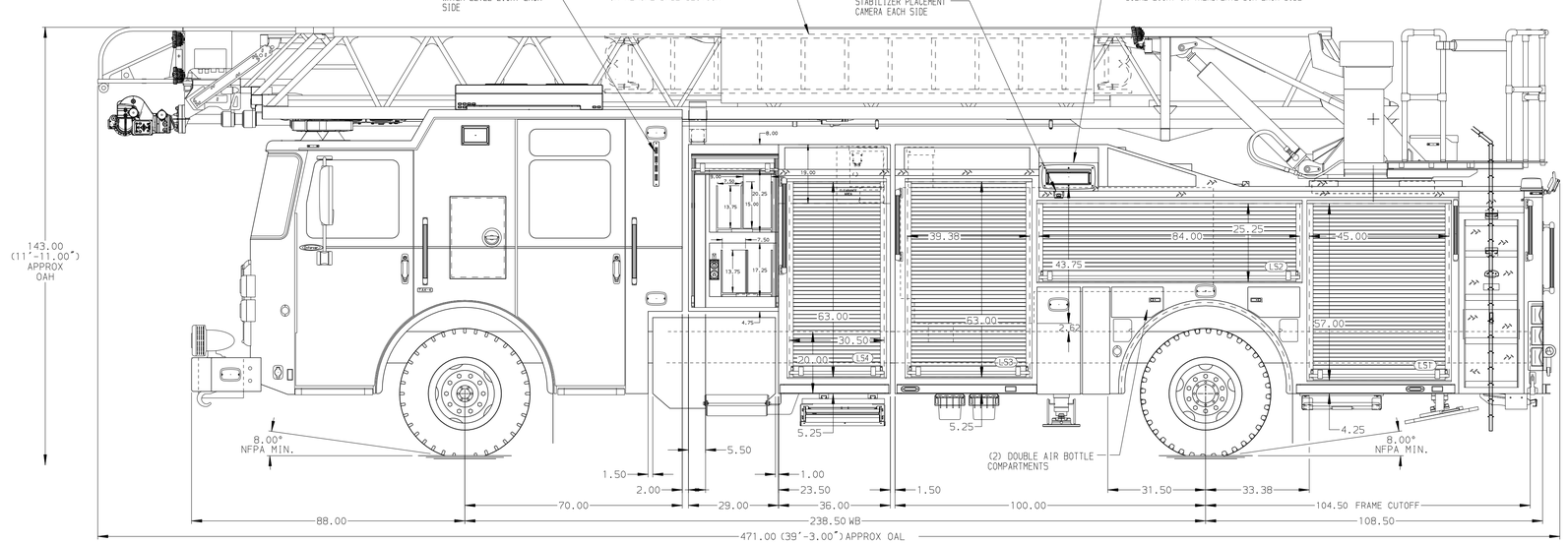

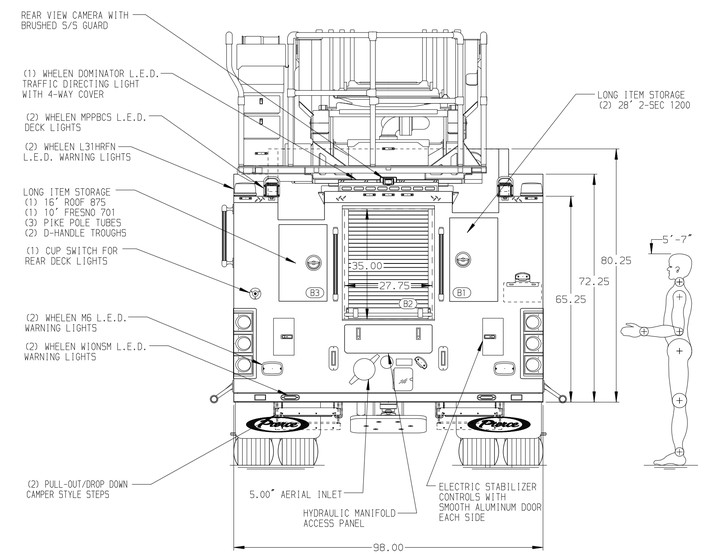

CHASSIS	CAB	AXLE,FRONT,CUSTOM	TRANSMISSION	PUMPHOUSE	CROSSLAYS,1.50"	DEADLAYS	SAFETY
Enforcer Chassis, PUC	7010 Notched Enforcer Cab, PUC	22,800 Lb TAK-4 Axle	ALLison 6th Gen, 4000 EVS P	Control Zone, PAL/PAP PUC	(2) 1.50", Poly Trays, 200'	(1) Special Size Poly Tray	Side Roll and Frontal Impact Protection
ENGINE	BUMPER	AXLE,REAR		PUMP	CROSSLAYS,2.50"		
525 HP Cummins X12 Engine	19" Extended Painted Aluminum	33,500 Lb Meritor Axle		1500 GPM Pierce PUC	(1) 2.50", Poly Tray, 200'		

NOTE

DIMENSIONS SHOWN ARE APPROXIMATE AND ARE SUBJECT TO MINOR DEVIATIONS AS MAY OCCUR OR BE NECESSARY IN CONSTRUCTION.
MINOR DETAILS NOT SHOWN.

1. NO LIMITED RETRACTION REQUIRED
2. ONE ALUMINUM TOOLBOARD ADDED TO SLIDE-OUT TRAY PER ORDER
3. SHORELINE RECEPTACLE WITH KUSSMAUL SUPER AUTO-EJECT LOCATED ON DRIVER SIDE CAB CORNER
4. AIR INLET WITH DISCONNECT COUPLING IN THE DRIVER SIDE STEPWELL FORWARD
5. BATTERY CHARGER LOCATED BEHIND DRIVER SEAT
6. BATTERY CHARGE INDICATOR LOCATED ON THE DRIVER SIDE SEAT RISER
7. SEVEN ADJUSTABLE SHELVES LOCATED IN COMPARTMENTS PER ORDER
8. FOUR FLOOR MOUNTED SLIDE-OUT TRAYS LOCATED IN COMPARTMENTS PER ORDER
9. ONE ALUMINUM SWING-OUT TOOLBOARD LOCATED IN COMPARTMENT PER ORDER
10. TWO VERTICAL PARTITIONS LOCATED IN COMPARTMENTS PER ORDER
11. THREE BACK WALL MOUNTED TOOLBOARDS LOCATED IN COMPARTMENTS PER ORDER
12. ONE RECEPTACLE LOCATED IN COMPARTMENT PER ORDER
13. ONE CTECH THREE-DRAWER CABINET LOCATED IN COMPARTMENT PER ORDER
14. DC POWER TO AERIAL TIP
15. FIRE RESEARCH 2-WAY INTERCOM
16. 1500 GPM HIGH FLOW WATERWAY
17. TECNIQ 4-SECTION RUNG LIGHTING AT AERIAL DEVICE
18. NON-RAISED AERIAL PEDESTAL
19. LIFTING EYE ROPE RESCUE ATTACHMENT AT AERIAL TIP

REV	DATE	BY	CH
1	11NOV24	ANZ	CHR
0	23SEP24	ANZ	CHR

CHASSIS DATA
MAKE: PIERCE
MODEL: ENFORCER

Pierce MANUFACTURING INC.

TITLE: 107' ASCENDANT AERIAL LADDER AND BODY ASSEMBLY
FOR: AUBREY FIRE DEPARTMENT, AUBREY, TX
DWG NO.: 39243AD

JOB NO.	SCALE	DRAWN BY	CHECKED BY	SHEET SIZE	SHEET NO.
39243	1:24	ANZ	NAK	D	1 OF 1

DATE: 15JUN23 / 19JUN23

View File Created 26-NOV-2024 06:54:19