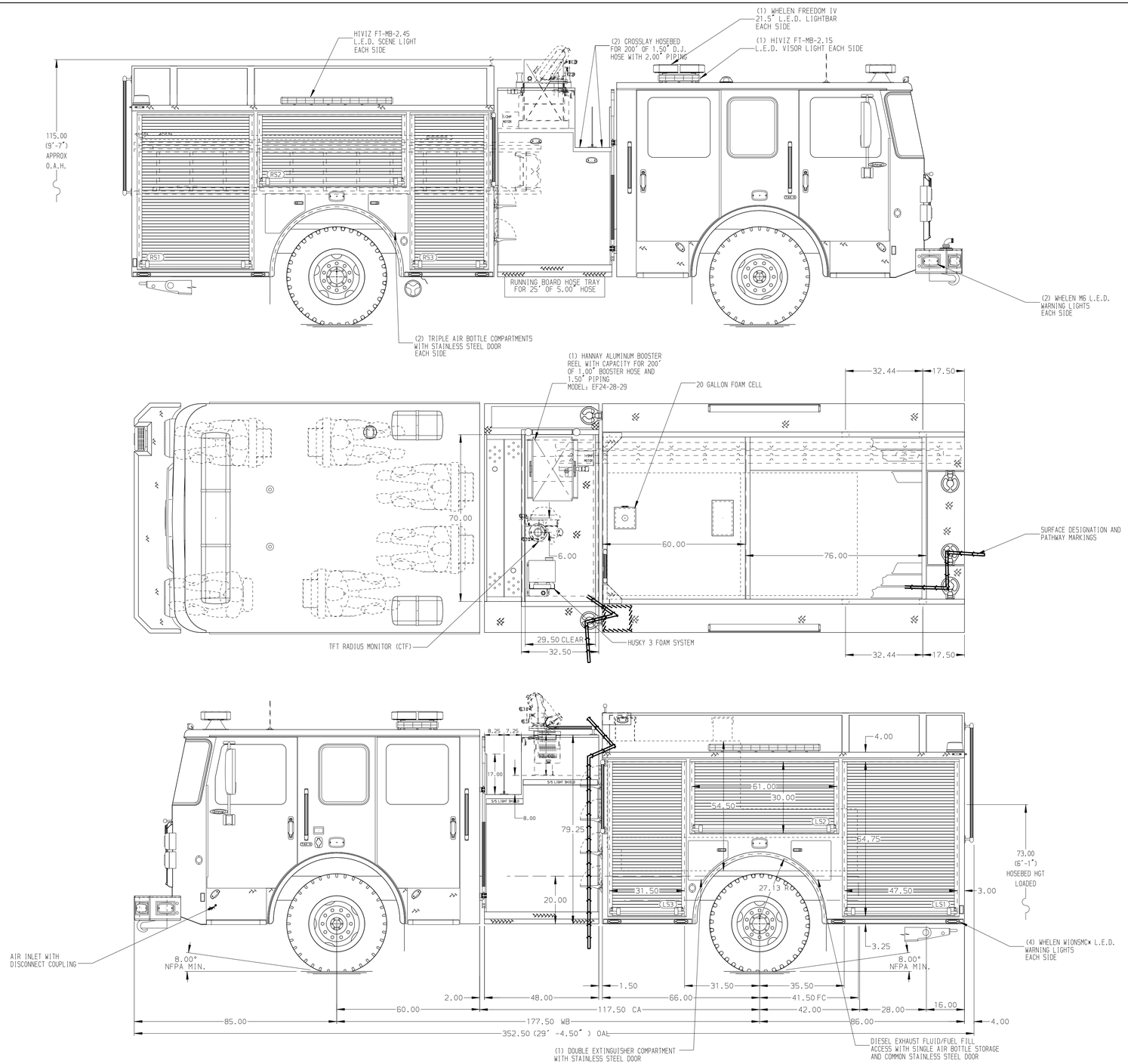

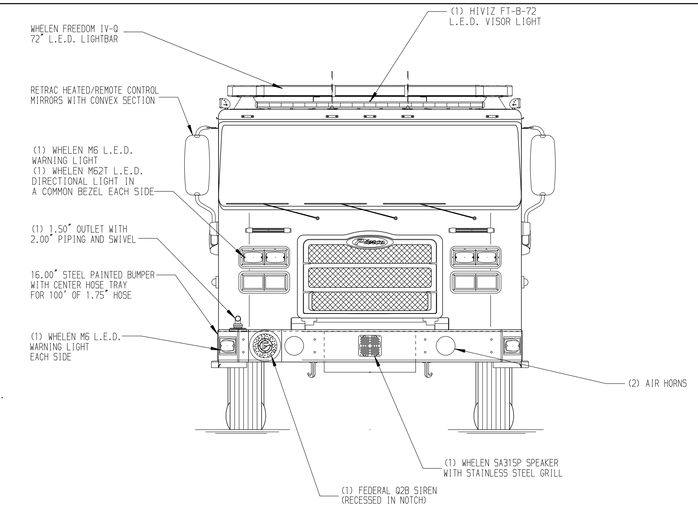

HOSEBED CAPACITIES

1. 200' OF 2.50" D.J. HOSE
2. 500' OF 3.00" D.J. HOSE
3. 1000' OF 5.00" D.J. HOSE

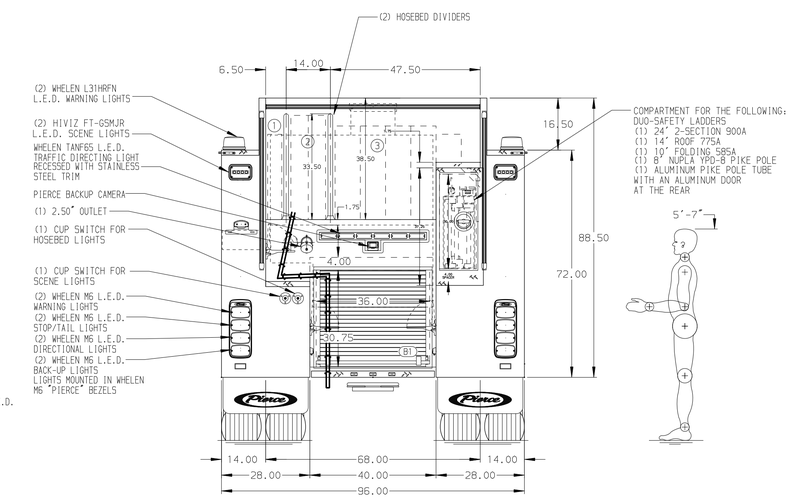

ALUMINUM BODY | MAXIMUM O.A.L. 354" | MAXIMUM O.A.H. 119" | SIDE ROLL AND FRONTAL IMPACT PROTECTION

NOTE

DIMENSIONS SHOWN ARE APPROXIMATE AND ARE SUBJECT TO MINOR DEVIATIONS AS MAY OCCUR OR BE NECESSARY IN CONSTRUCTION.
MINOR DETAILS NOT SHOWN.

1. BATTERY CHARGER LOCATED BEHIND DRIVER'S SEAT
2. DUAL L.E.D. LIGHT STRIPS LOCATED IN HOSE BED
3. (2) WORDEN HWG-SB CHOCKS SHIPPED LOOSE

REV	DATE	BY	CH
3	20SEP24	JAM	KBO
2	16AUG24	JAM	KBO
1	16MAY24	JAM	KBO

CHASSIS DATA
MAKE: PIERCE
MODEL: ENFORCER

Pierce MANUFACTURING INC.

TITLE: 1500 GPM, 750G TANK, 730G WATER, 20G FOAM
152" 2G PUMPER, MUX

FOR: LITTLE ROCK
LITTLE ROCK, ARKANSAS

DWG NO. 39257AD-SH1

JOB NO.	39257
SCALE	1:24
DATE	
DRAWN BY	JAM 06MAY24
CHECKED BY	KBO 09MAY24
SHEET SIZE	D
SHEET NO.	1 OF 2

View File Created 25-SEP-2024 12:54:11