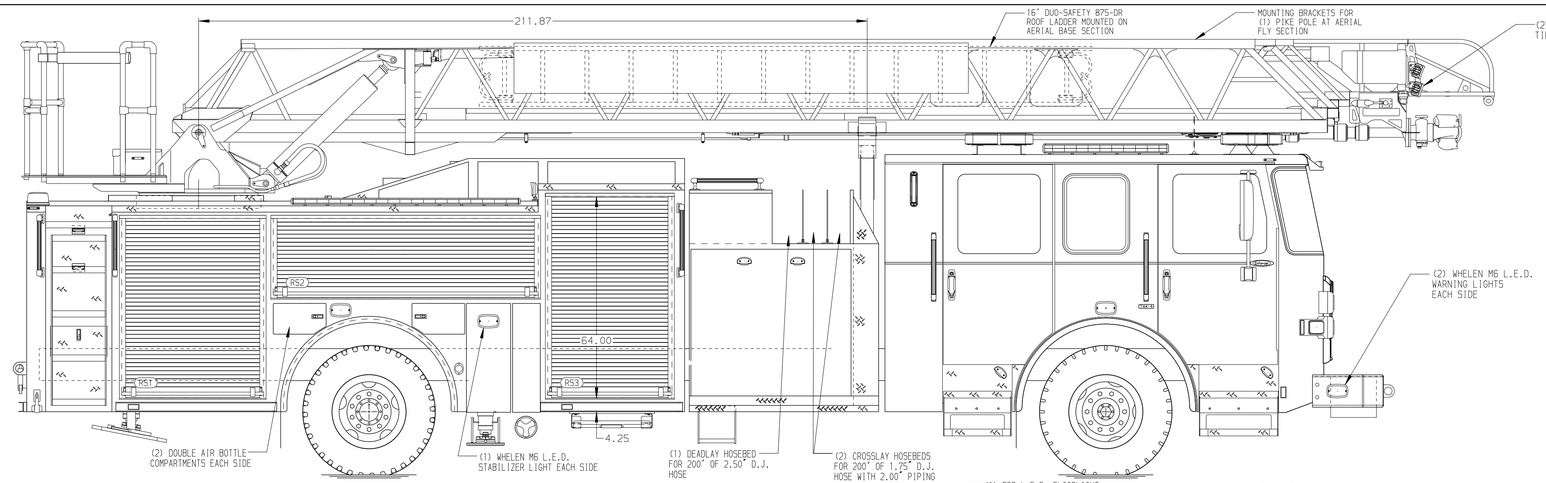

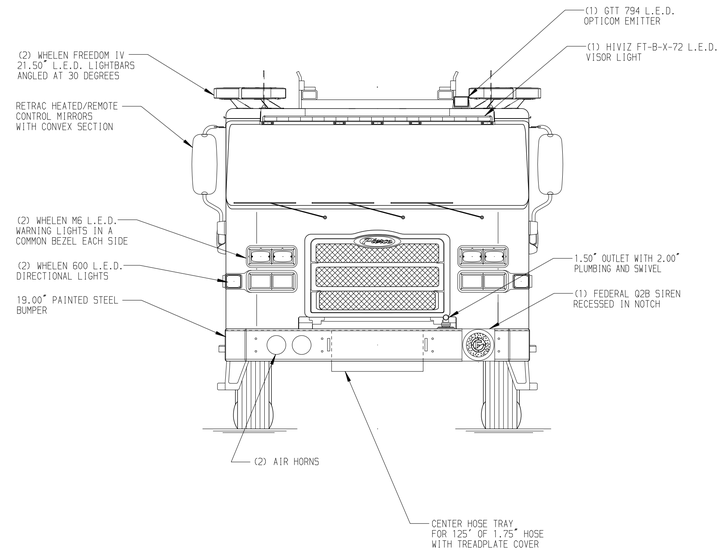

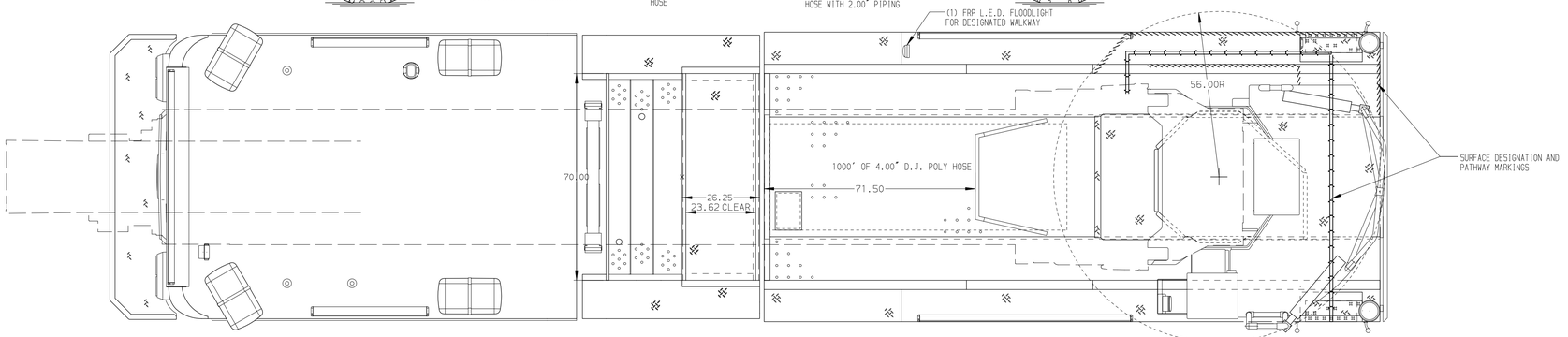

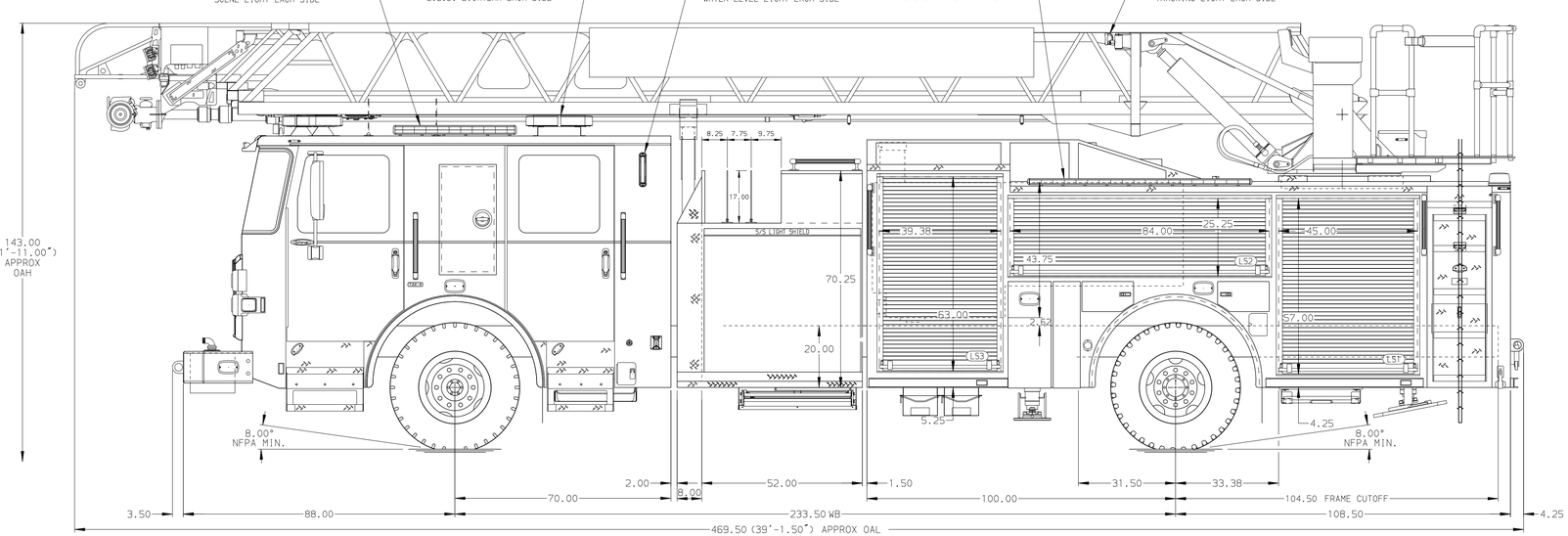

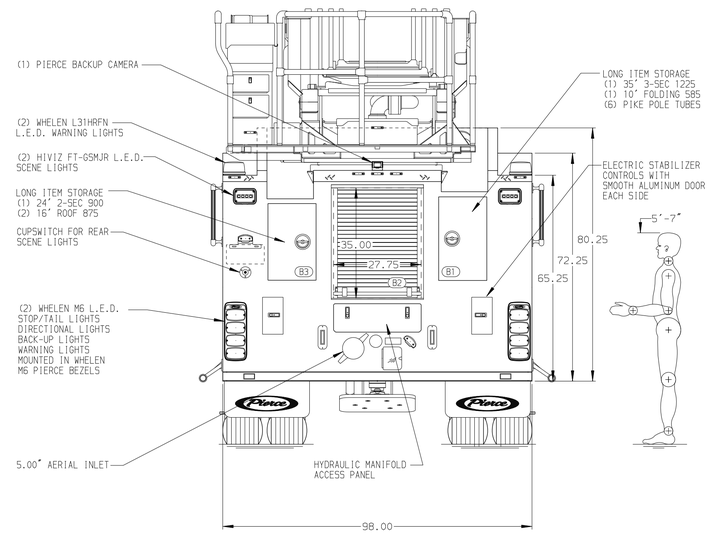

ALUMINUM BODY | SIDE ROLL AND FRONTAL IMPACT PROTECTION

NOTE

DIMENSIONS SHOWN ARE APPROXIMATE AND ARE SUBJECT TO MINOR DEVIATIONS AS MAY OCCUR OR BE NECESSARY IN CONSTRUCTION.
MINOR DETAILS NOT SHOWN.

1. NO LIMITED RETRACTION REQUIRED
2. DC POWER TO AERIAL TIP
3. SHORELINE RECEPTACLE WITH BLUE SEA SURE EJECT LOCATED REAR OF CREW CAB DOOR
4. AIR INLET WITH KUSSMAUL AIR EJECT LOCATED REAR OF CREW CAB DOOR
5. BATTERY CHARGER LOCATED PER ORDER
6. BATTERY CHARGE INDICATOR LOCATED ON DRIVER'S SEAT RISER
7. SIX ADJUSTABLE SHELVES LOCATED IN COMPARTMENTS PER ORDER
8. TWO FLOOR MOUNTED SLIDE-OUT TRAYS LOCATED IN COMPARTMENTS PER ORDER
9. ONE SWING-OUT TOOLBOARD LOCATED IN COMPARTMENT PER ORDER
10. LIFTING EYE ROPE RESCUE ATTACHMENT AT AERIAL TIP
11. 1500 GPM HIGH FLOW WATERWAY
12. TECNIQ 4-SECTION RUNG LIGHTING AT AERIAL DEVICE
13. ONE RECEPTACLE LOCATED IN CAB PER ORDER
14. TWO RECEPTACLES LOCATED IN COMPARTMENTS PER ORDER

REV	DATE	BY	CH
B	03DEC24	ANZ	JGO
A	24OCT24	ANZ	JGO

CHASSIS DATA
MAKE: PIERCE
MODEL: ENFORCER

Pierce MANUFACTURING INC.

TITLE: 107' ASCENDANT AERIAL LADDER AND BODY ASSEMBLY
500 GALLON WATER TANK

FOR: DUNBAR FIRE DEPARTMENT
DUNBAR, WV

DWG NO.: 39266AD

JOB NO.	SCALE	DRAWN BY	CHECKED BY	SHEET SIZE	SHEET NO.
39266	1:24	ANZ	BYO	D	1 OF 1

DATE: 28AUG24
03SEP24

View File Created 03-DEC-2024 14:37:22