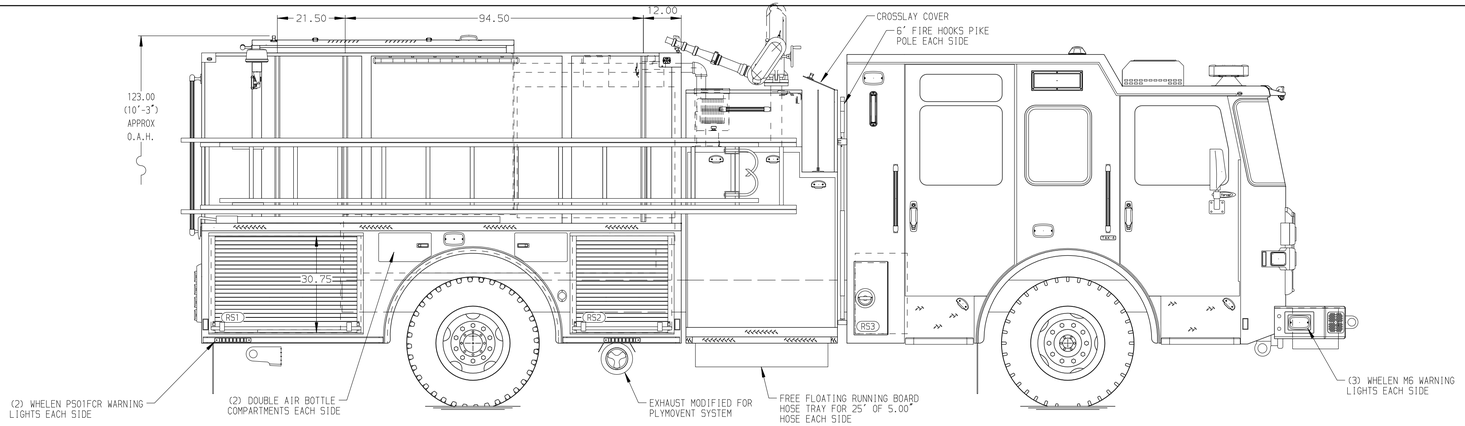

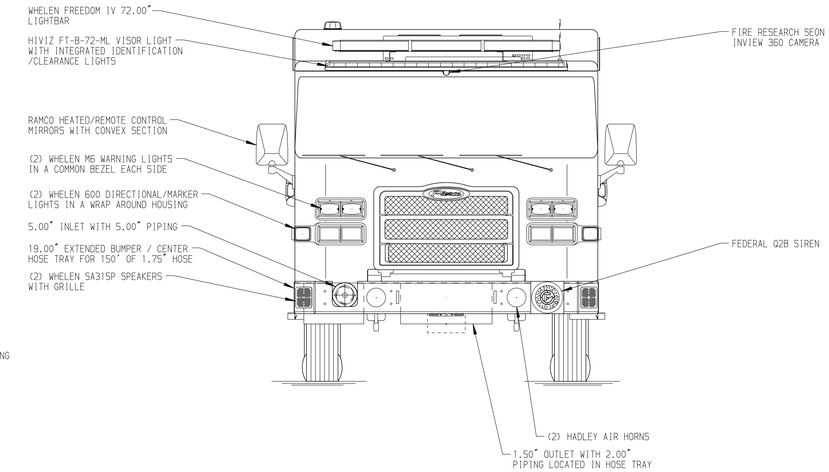

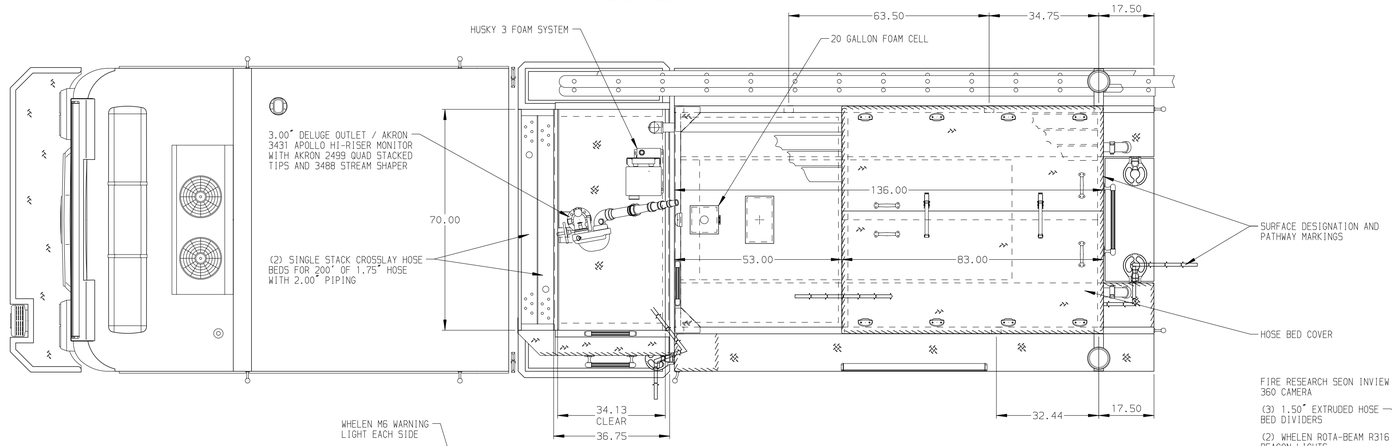

HOSEBED CAPACITIES

1. 300' OF 2.50" D.J. POLY HOSE
2. 200' OF 1.75" D.J. POLY HOSE TRAY DIM. INSIDE=7.0"W X 17.5"H X 80.0"L
3. 400' OF 2.50" D.J. POLY HOSE (LOWER) 200' OF 1.75" D.J. POLY HOSE (UPPER)
4. 750' OF 5.00" D.J. POLY HOSE
5. 200' OF 2.50" D.J. POLY HOSE (PRE-CONNECTED)
6. 200' OF 1.75" D.J. POLY HOSE TRAY DIM. INSIDE=7.0"W X 17.5"H X 80.0"L

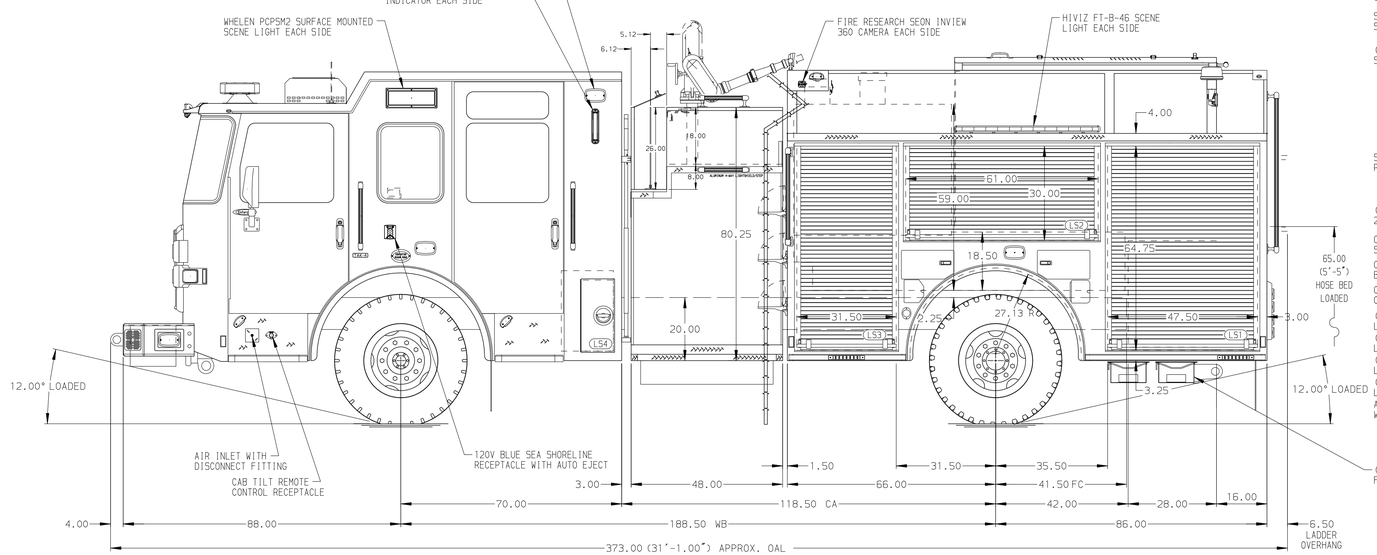

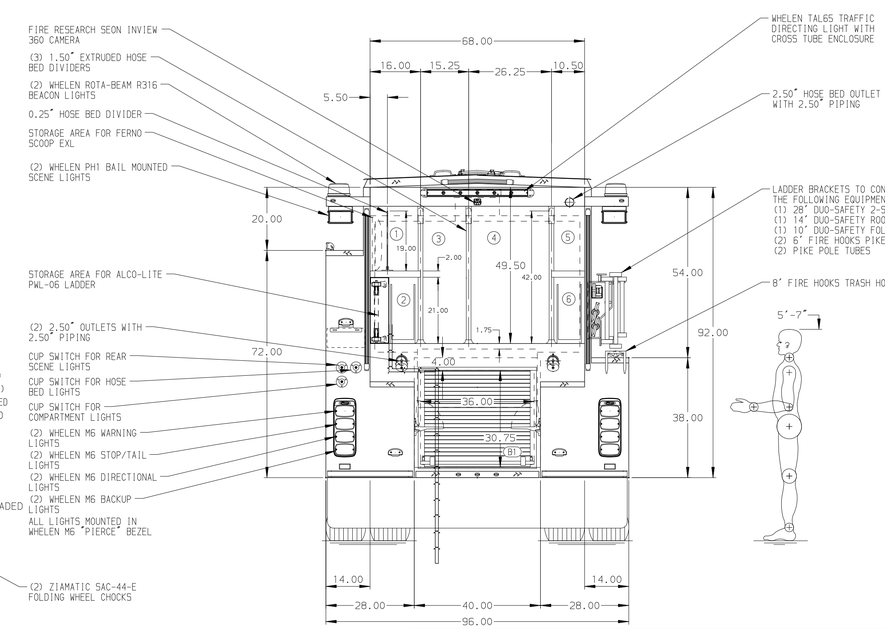

ALUMINUM BODY

TARGET O.A.L. 372.00"

NOTE

DIMENSIONS SHOWN ARE APPROXIMATE AND ARE SUBJECT TO MINOR DEVIATIONS AS MAY OCCUR OR BE NECESSARY IN CONSTRUCTION.
MINOR DETAILS NOT SHOWN.

1. BATTERY CHARGER LOCATED PER ORDER
2. BATTERY CHARGER INDICATOR LOCATED PER ORDER
3. SIX FULL WIDTH/DEPTH ADJUSTABLE SHELVES WITH SIDES LOCATED PER ORDER
4. TWO FLOOR MOUNTED SLIDE-OUT TRAYS WITH SIDES LOCATED PER ORDER
5. ONE SWING-OUT TOOLBOARD WITH PEGBOARD PATTERN LOCATED PER ORDER
6. ONE ALUMINUM SLIDE-OUT TOOLBOARD WITH PEGBOARD PATTERN LOCATED PER ORDER
7. ONE "L" SHAPED PARTITION LOCATED PER ORDER
8. TWO 120V DUPLEX RECEPTACLES LOCATED IN CAB PER ORDER
9. ONE 120V 6-PLACE RECEPTACLE STRIP
10. TWO 120V DUPLEX RECEPTACLES IN REAR BODY LOCATED PER ORDER
11. ONE ZICO KD-UH-6-SF SCBA HOLDER BRACKET LOCATED PER ORDER

REV	DATE	BY	CH
V	27JAN25	BST	JLL
V	19DEC24	BST	JLL
V	250CT24	LST	WKL

CHASSIS DATA
MAKE: PIERCE
MODEL: ENFORCER

Pierce MANUFACTURING INC.

TITLE: 2000GPM,750G TANK,730G WATER,20G FOAM CELL 152" PUMPER BODY,MUX

FOR: PRINCE RUPERT FIRE DEPARTMENT PRINCE RUPERT,BRITISH COLUMBIA

DWG NO.: 39280AD

JOB NO.	39280
SCALE 1:24	DATE
DRAWN BY BST	210CT24
CHECKED BY WKL	210CT24
SHEET SIZE D	SHEET NO. 1 OF 1

View File Created 28-JAN-2025 09:02:48