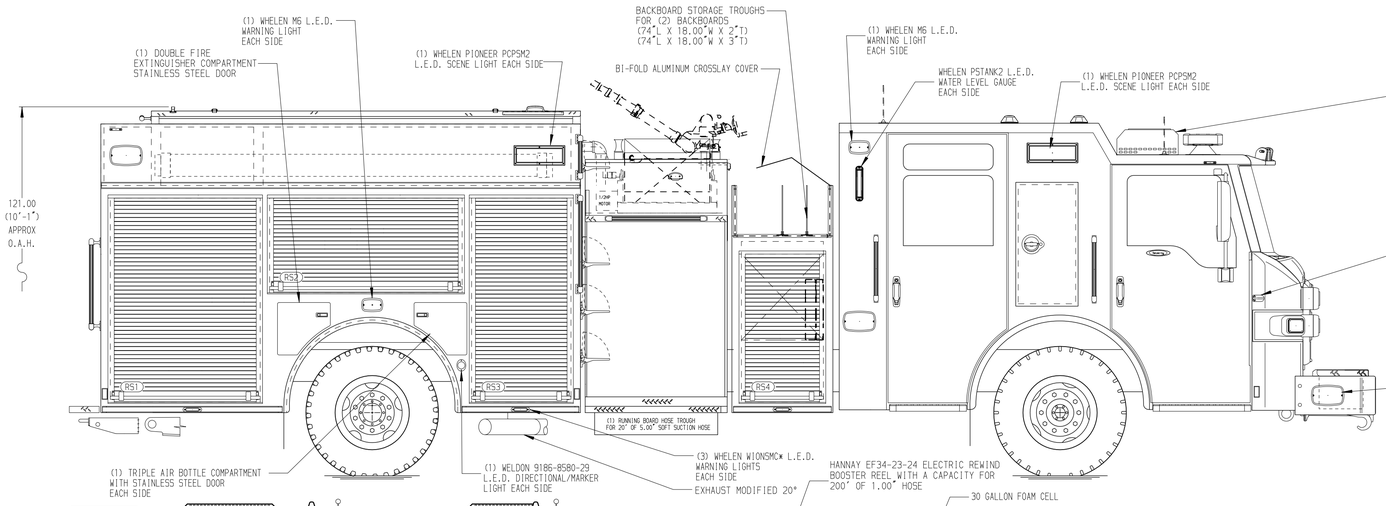

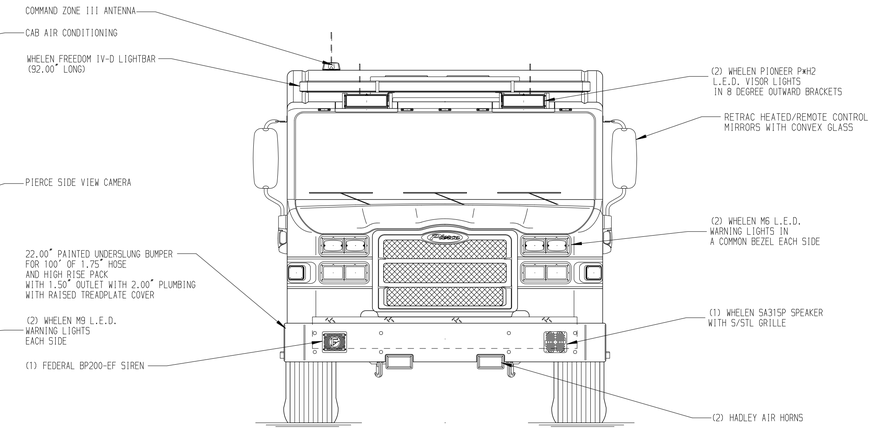

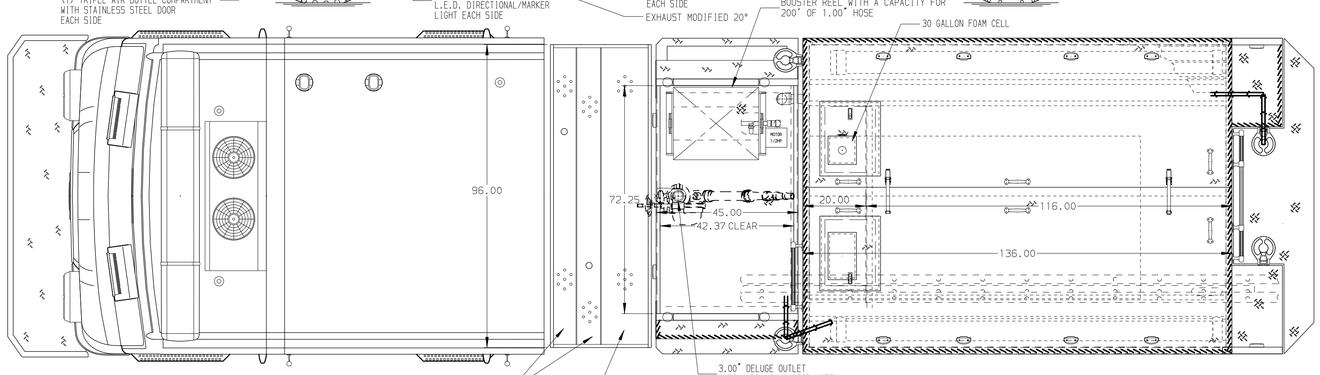

HOSEBED CAPACITIES
1. 1000' OF 5.00" D.J. POLY HOSE
2. 150' OF 2.50" D.J. POLY HOSE

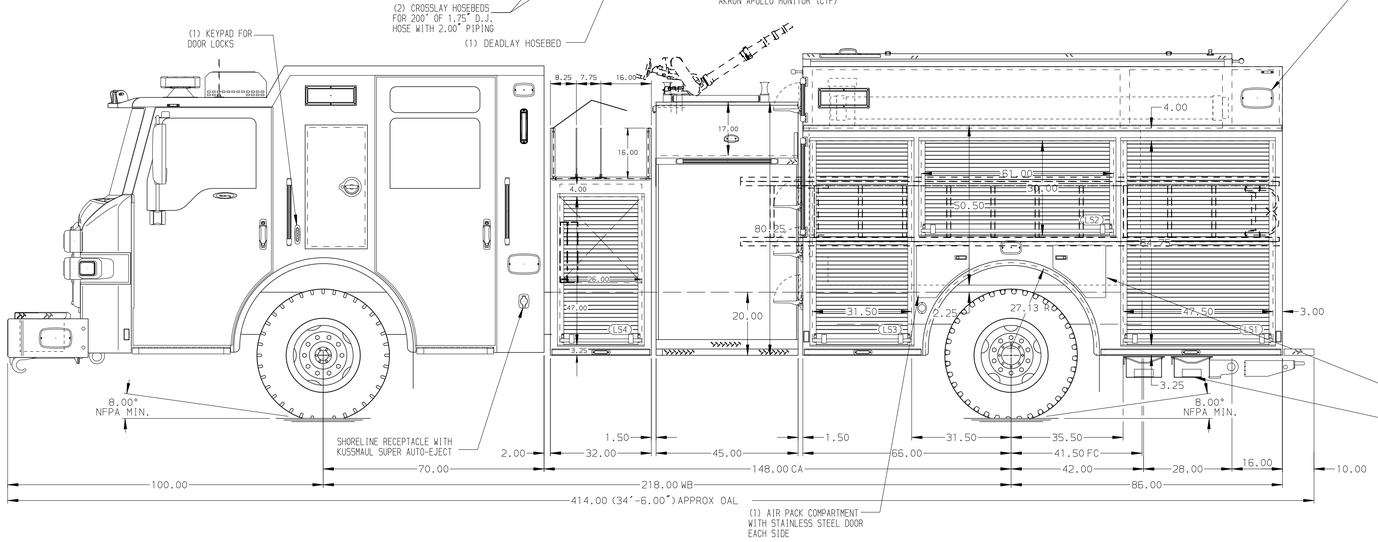

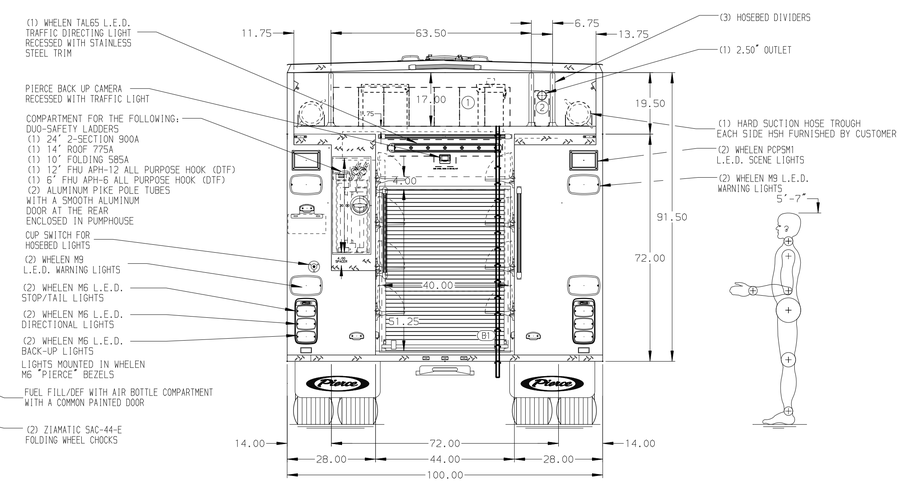

ALUMINUM BODY

FRONTAL IMPACT PROTECTION

NOTE

DIMENSIONS SHOWN ARE APPROXIMATE AND ARE SUBJECT TO MINOR DEVIATIONS AS MAY OCCUR OR BE NECESSARY IN CONSTRUCTION.
MINOR DETAILS NOT SHOWN.

1. KUSSMAUL BATTERY CHARGER LOCATED IN CAB SEAT BOX
2. BATTERY CHARGER INDICATOR LOCATED IN D.S. STEP WELL
3. ONE L.E.D. LIGHT STRIP LOCATED ON EACH SIDE IN THE HOSEBED
4. AIR INLET WITH DISCONNECT COUPLING ON D.S. PUMP PANEL
5. AIR OUTLET WITH SHUT OFF VALVE ON P.S. PUMP PANEL

REV	DATE	BY	CH
7	10APR25	JAM	ZWE
6	14OCT24	JAM	ZWE
5	29AUG24	JAM	ZWE
4	09JUL24	JAM	SJS

CHASSIS DATA
MAKE: PIERCE
MODEL: VELOCITY

Pierce MANUFACTURING INC.

TITLE: 1750 GPM, 780G TANK, 750G WATER, 30G FOAM 152" 2G PUMPER, MUX

FOR: SAN CARLOS PARK FIRE DEPARTMENT SAN CARLOS, FLORIDA

DWG NO.: 39289AD

JOB NO.	39289
SCALE	1:24
DATE	
DRAWN BY	JAM 26JUN24
CHECKED BY	EGO 28JUN24
SHEET SIZE	D
SHEET NO.	1 OF 1

View File Created 10-APR-2025 12:04:02