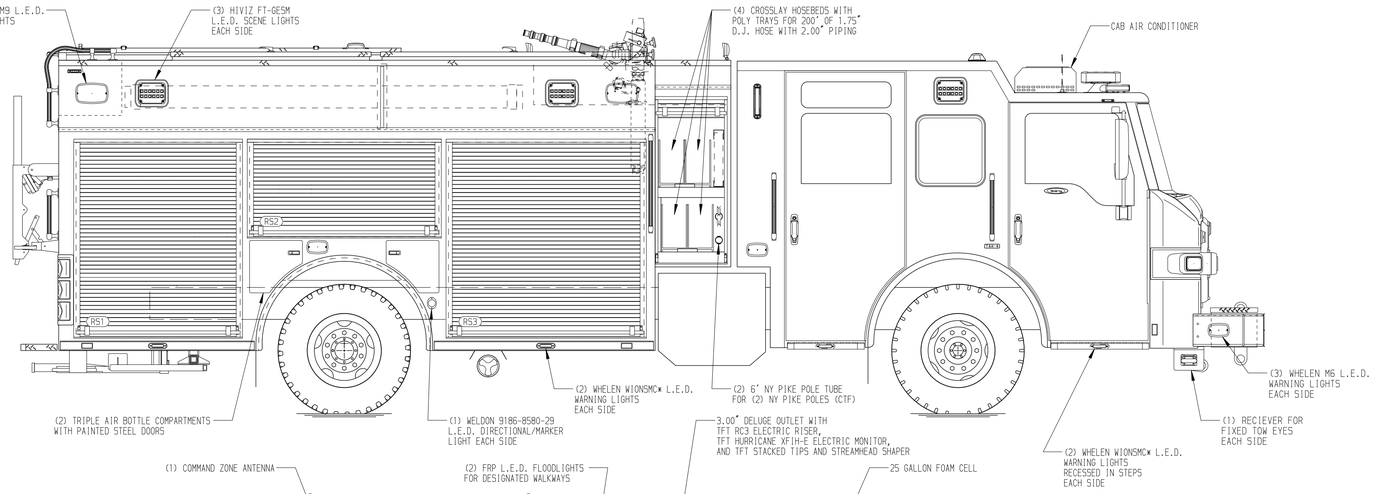

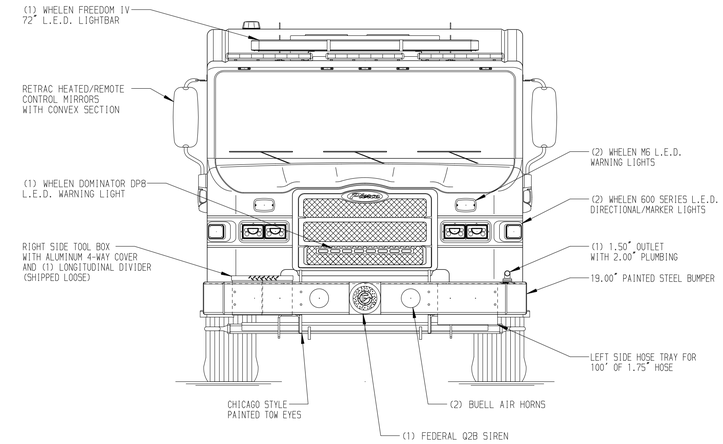

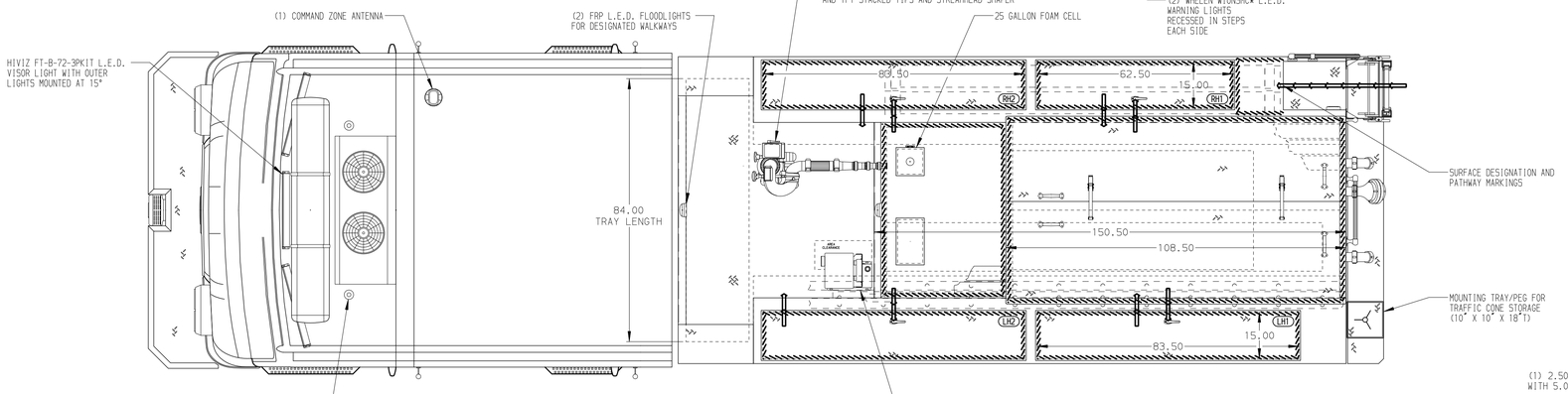

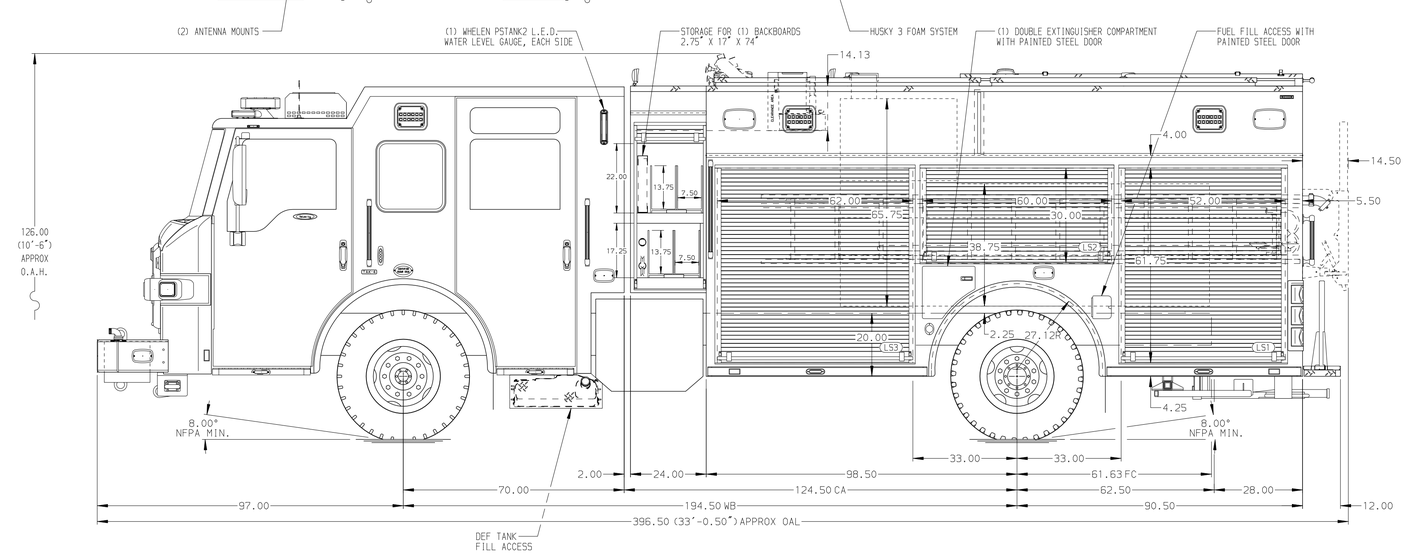

HOSEBED CAPACITIES

1. 600' OF 2.50" D.J. POLY HOSE
2. 150' OF 2.50" D.J. POLY HOSE
3. 1000' OF 5.00" D.J. POLY HOSE
4. 400' OF 1.50" S.J. WILDLAND HOSE

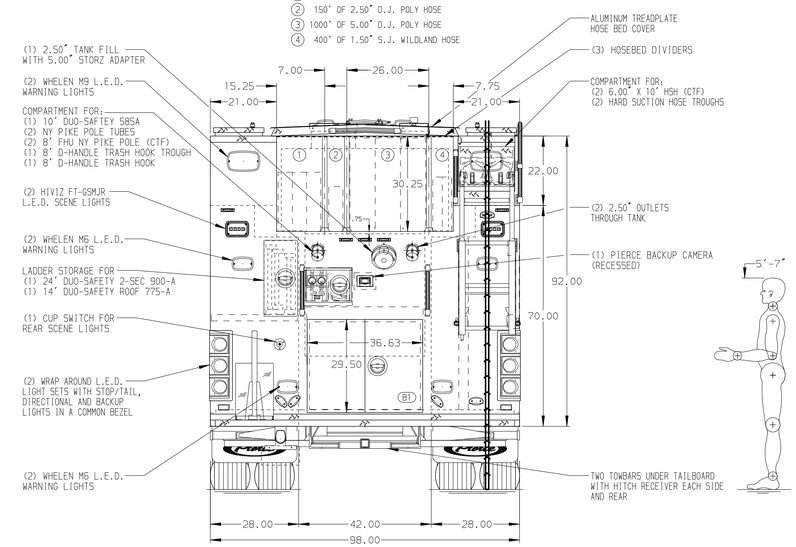

ALUMINUM BODY

SIDE ROLL AND FRONTAL IMPACT PROTECTION

NOTE

DIMENSIONS SHOWN ARE APPROXIMATE AND ARE SUBJECT TO MINOR DEVIATIONS AS MAY OCCUR OR BE NECESSARY IN CONSTRUCTION.
MINOR DETAILS NOT SHOWN.

1. AIR INLET WITH DISCONNECT COUPLING LOCATED IN THE DRIVER'S SIDE STEPWELL
2. BATTERY CHARGER LOCATED PER ORDER
3. BATTERY CHARGE INDICATOR LOCATED ON DRIVER'S SEAT RISER
4. ONSPOT AUTOMATIC TIRE CHAINS TO BE PROVIDED AT REAR
5. SHORELINE RECEPTACLE TO BE LOCATED IN THE DRIVER'S SIDE STEPWELL
6. ONE PAIR OF WORDEN HWG-SB SUPER GRIPPER WHEEL CHOCKS TO BE PROVIDED
7. WHEEL CHOCK MOUNTING BRACKETS TO BE PROVIDED BY CUSTOMER

REV	DATE	BY	CH
7	23JAN25	JDA	GKH
6	21JAN25	JDA	GKH
5	09JAN25	JDA	GKH
4	06DEC24	JDA	GKH
3	04DEC24	JDA	GKH

CHASSIS DATA
MAKE: PIERCE
MODEL: VELOCITY FR

Pierce MANUFACTURING INC.

TITLE: 1500GPM, 750G TANK, 725G WATER, 25G FOAM 189" PUC, MUX
FOR: REDMOND FIRE & RESCUE REDMOND, OREGON
DWG NO. 39307AD-SH1

JOB NO.	39307 01-02
SCALE	1:24
DATE	
DRAWN BY	JDA 19AUG24
CHECKED BY	SJS 20AUG24
SHEET SIZE	D
SHEET NO.	1 OF 2

View File Created 23-JAN-2025 14:55:21