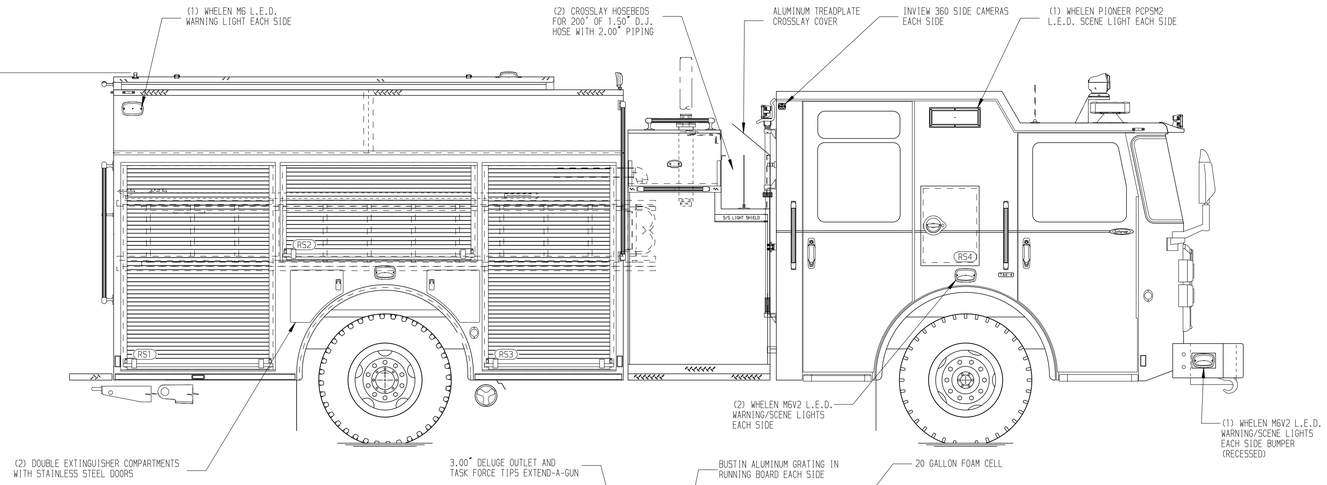

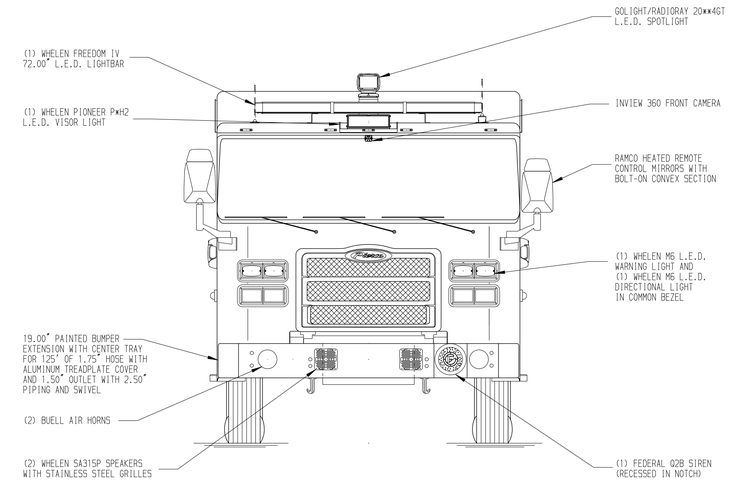

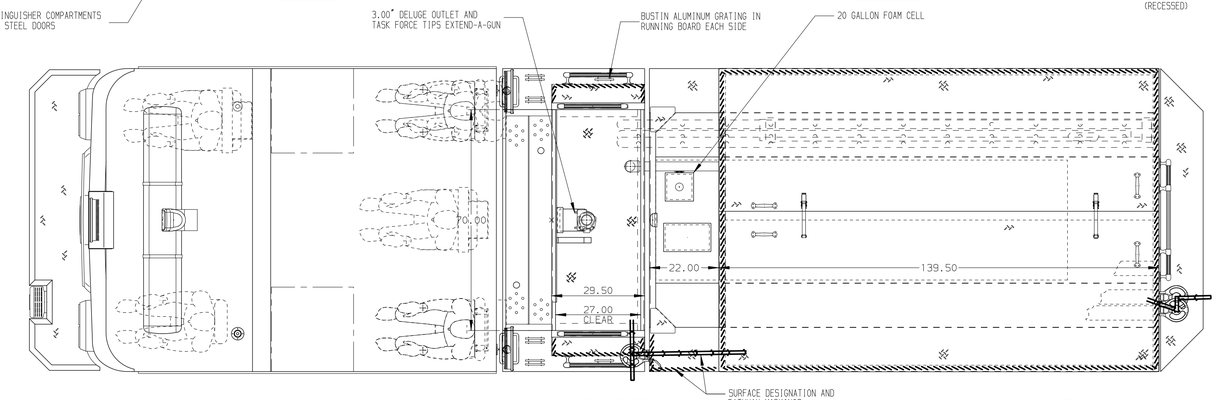

HOSEBED CAPACITIES

1 - 1000' OF 5.00" D.J. POLY HOSE
2 - 500' OF 2.50" D.J. POLY HOSE
2 - 300' OF 2.50" D.J. POLY HOSE

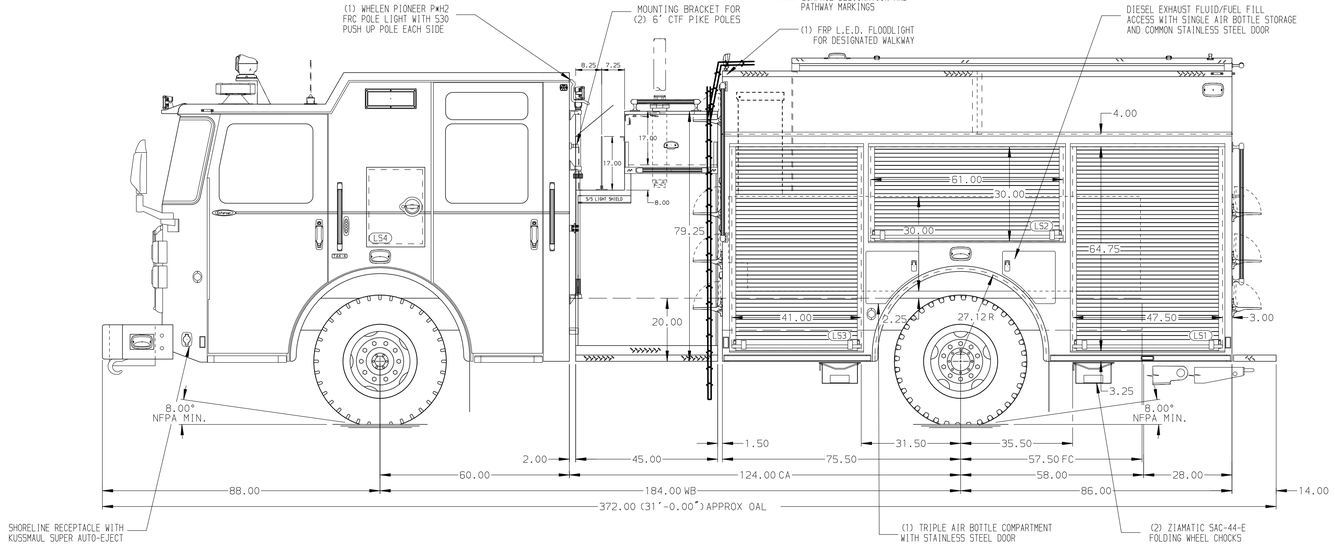

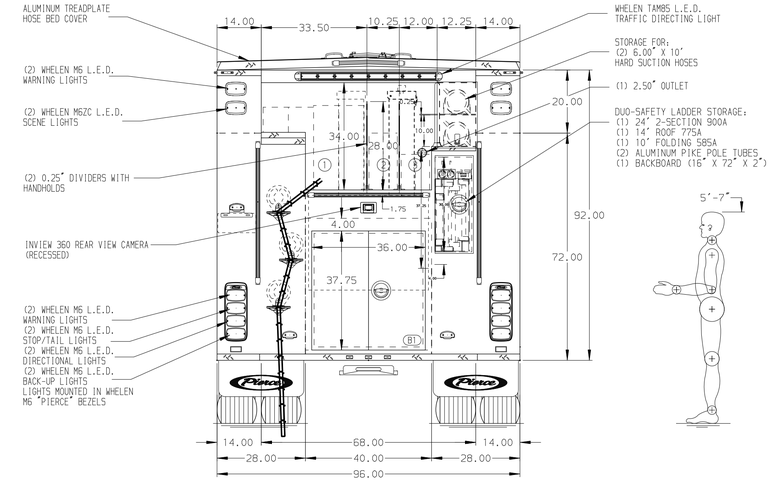

ALUMINUM BODY

NOTE

DIMENSIONS SHOWN ARE APPROXIMATE AND ARE SUBJECT TO MINOR DEVIATIONS AS MAY OCCUR OR BE NECESSARY IN CONSTRUCTION.
MINOR DETAILS NOT SHOWN.

1. BATTERY CHARGER LOCATED BEHIND DRIVER SEAT
2. BATTERY CHARGER INDICATOR LOCATED ON THE DRIVER'S SEAT RISER
3. AIR INLET/OUTLET WITH DISCONNECT FITTING LOCATED DS PUMP PANEL
4. TURBOFOAM TFC-350 FOAM SYSTEM IN PUMP HOUSE

REV	DATE	BY	CH
2	21JAN25	SJM	KBO
1	17DEC24	SJM	KBO

CHASSIS DATA
MAKE: PIERCE
MODEL: ENFORCER

Pierce MANUFACTURING INC.

TITLE: 2000GPM, 520G TANK, 500G WATER, 20G FOAM 161" PUMPER, HARDWIRED
FOR: ALBUQUERQUE FIRE RESCUE ALBUQUERQUE, NEW MEXICO
DWG NO.: 39331AD-SH1

JOB NO.	39331 01-02
SCALE	1:24
DATE	
DRAWN BY	SJM 18JUL24
CHECKED BY	KBO 31JUL24
SHEET SIZE	D
SHEET NO.	1 OF 2

View File Created 22-JAN-2025 08:24:19