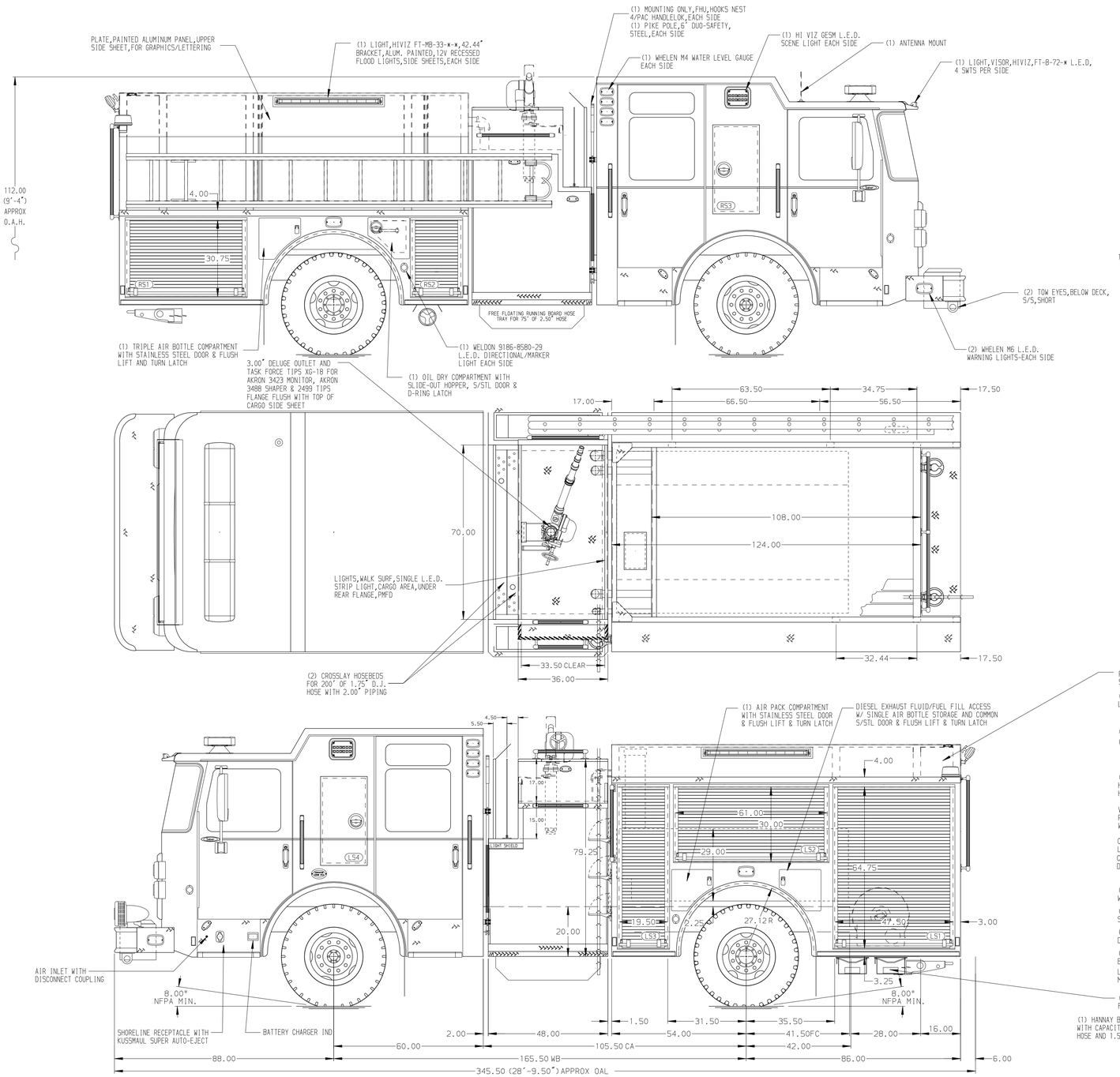

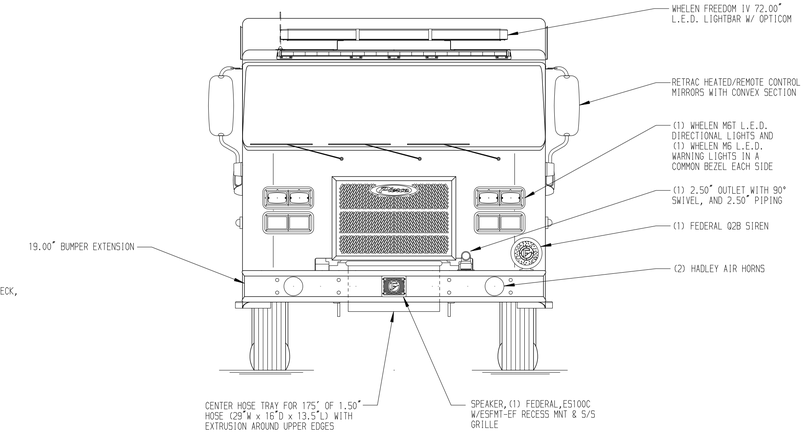

HOSEBED CAPACITIES

1 - 200' OF 1.75" D.J. POLY HOSE
2 - 300' OF 2.00" D.J. POLY HOSE
3 - 450' OF 2.50" D.J. POLY HOSE
4 - 1000' OF 5.00" D.J. POLY HOSE
5 - 150' OF 2.50" D.J. POLY HOSE
6 - 150' OF 3.00" D.J. POLY HOSE

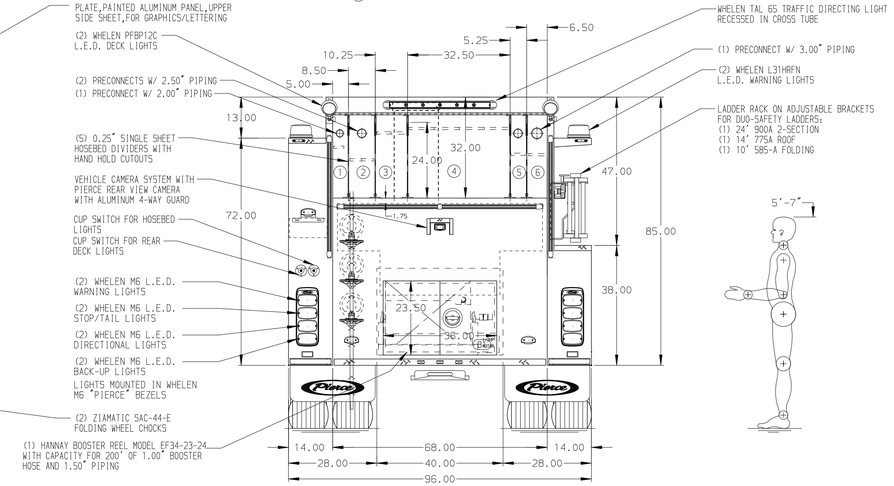

ALUMINUM BODY

NOTE
DIMENSIONS SHOWN ARE APPROXIMATE AND ARE SUBJECT TO MINOR DEVIATIONS AS MAY OCCUR OR BE NECESSARY IN CONSTRUCTION.
MINOR DETAILS NOT SHOWN.

REV	DATE	BY	CH
5	09SEP24	VHO	EEM
4	12JUL24	VHO	NAS
3	09MAY24	VHO	NAS
2	29MAR24	CDU	SJS
1	22MAR24	CDU	SJS

CHASSIS DATA
MAKE: PIERCE
MODEL: SABER FR

Pierce MANUFACTURING INC.

TITLE: 1500-D-500P, 500 GAL WATER TANK, 140" RS LOW, LS FH RS LADDER BRACKET, (2) CROSSLAYS, DELUGE

FOR: NANTICOKE CITY FIRE DEPARTMENT
NANTICOKE, PENNSYLVANIA

DWG NO. 39336AD

JOB NO.	39336
SCALE	1:24
DATE	
DRAWN BY	SDS 08FEB23
CHECKED BY	CDU 24JAN24
SHEET SIZE	D
SHEET NO.	1 OF 1

View File Created 09-SEP-2024 14:08:58