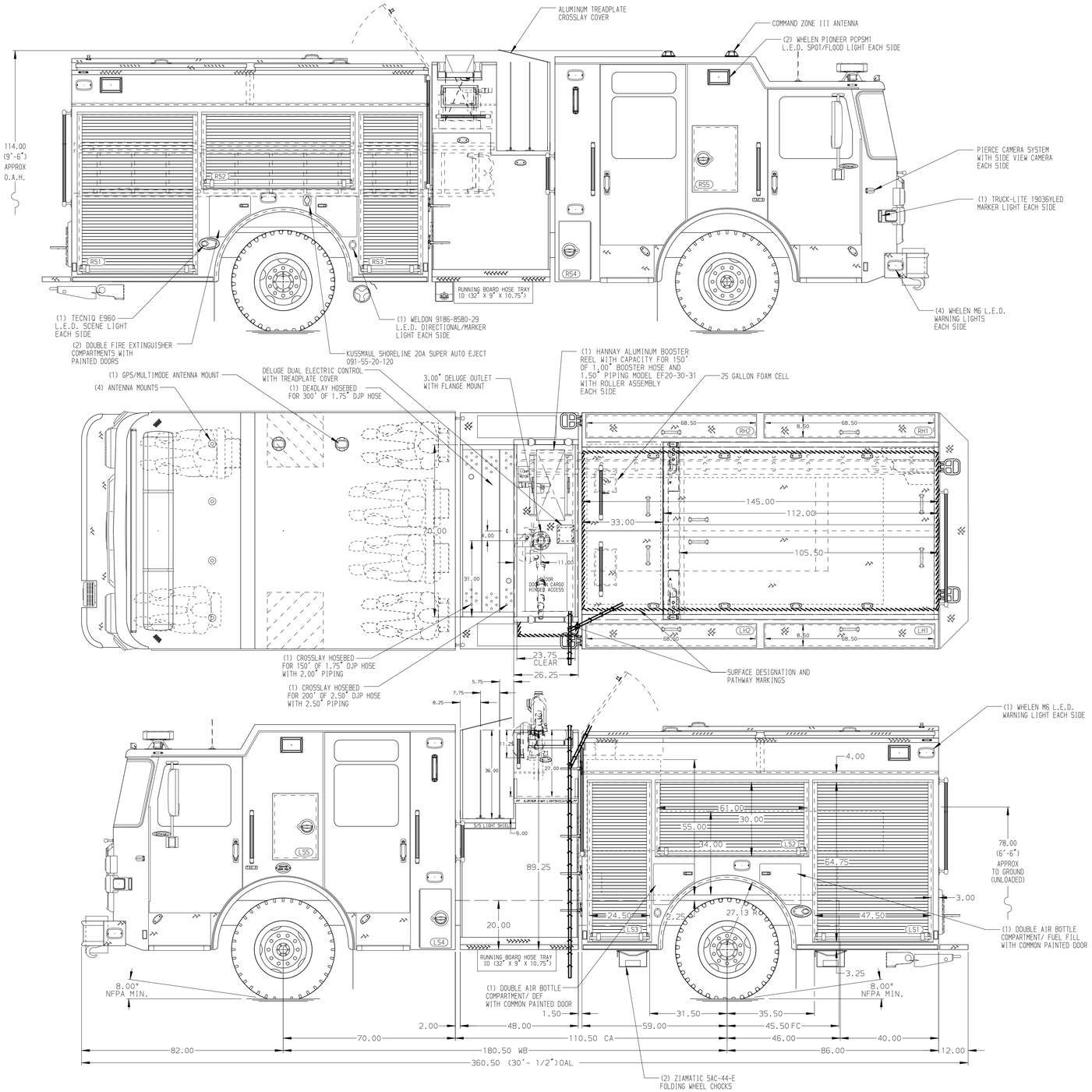

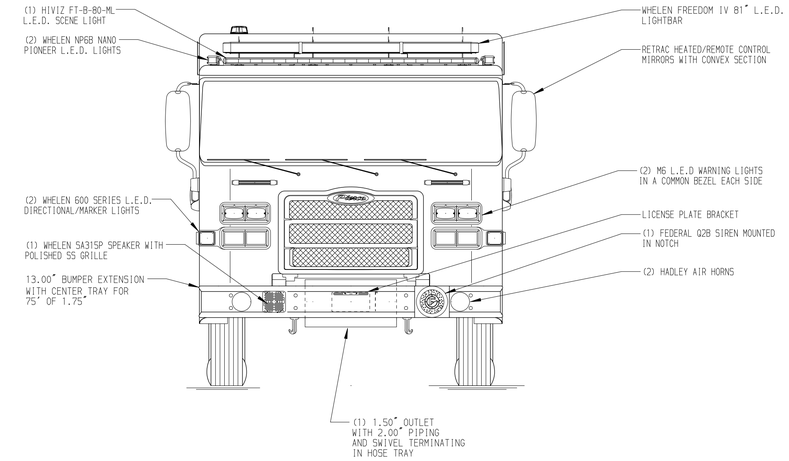

HOSEBED CAPACITIES

1. 1000' OF 5.00" D.J.POLY HOSE
2. 600' OF 2.50" D.J.POLY HOSE
3. 300' OF 1.75" D.J.POLY HOSE
4. 200' OF 3.00" D.J.POLY HOSE
5. 200' OF 3.00" D.J.POLY HOSE

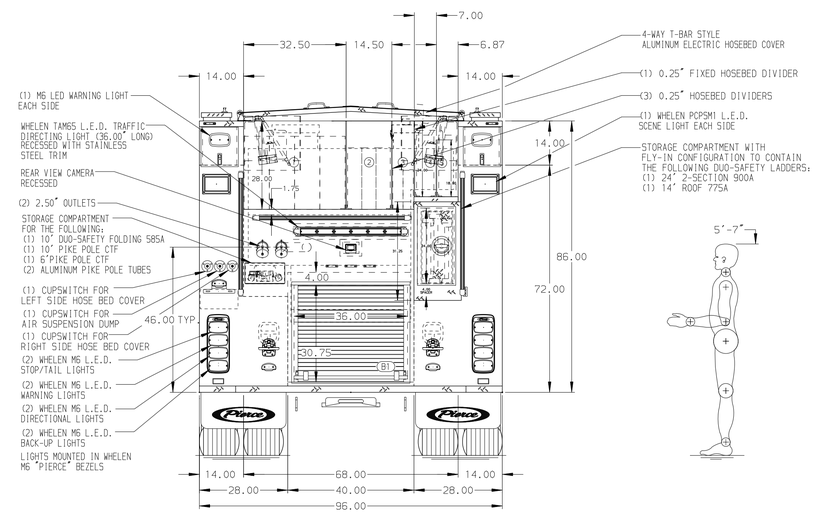

ALUMINUM BODY | MAXIMUM O.A.L. 361.50" | MAXIMUM O.A.H. 118.00" | SIDE ROLL AND FRONTAL IMPACT PROTECTION

NOTE

DIMENSIONS SHOWN ARE APPROXIMATE AND ARE SUBJECT TO MINOR DEVIATIONS AS MAY OCCUR OR BE NECESSARY IN CONSTRUCTION.
MINOR DETAILS NOT SHOWN.

1. AIR OUTLET WITH SHUTOFF VAVLE LOCATED AT DRIVER'S SIDE PUMP PANEL
2. BATTERY CHARGER LOCATED IN BODY COMPARTMENT PER ORDER
3. BATTERY CHARGE INDICATOR LOCATED ON DRIVER'S SEAT RISER
4. DUAL LED LIGHT STRIPS LOCATED IN HOSE BED
5. DUAL LED LIGHT STRIPS IN HATCH COMPARTMENTS LOCATED PER ORDER
6. FOAM PRO 2002 FOAM SYSTEM

REV	DATE	BY	CH
V	13JAN24	SJM	BSE
B	06DEC24	KLE	BSE
V	110CT24	SJM	BSE

CHASSIS DATA
MAKE: PIERCE
MODEL: ENFORCER

Pierce MANUFACTURING INC.

TITLE: 1500 GPM, 725G TANK, 700G WATER, 25G FOAM 145" 2G PUMPER, MUX
FOR: SACRAMENTO METROPOLITAN FIRE DISTRICT MATHER, CALIFORNIA
DWG NO.: 39344AD-SH1

JOB NO.	39344 01-05
SCALE	1:24
DATE	
DRAWN BY	SJM 020CT24
CHECKED BY	BSE 040CT24
SHEET SIZE	D
SHEET NO.	1 OF 2

View File Created 16-JAN-2025 14:56:31