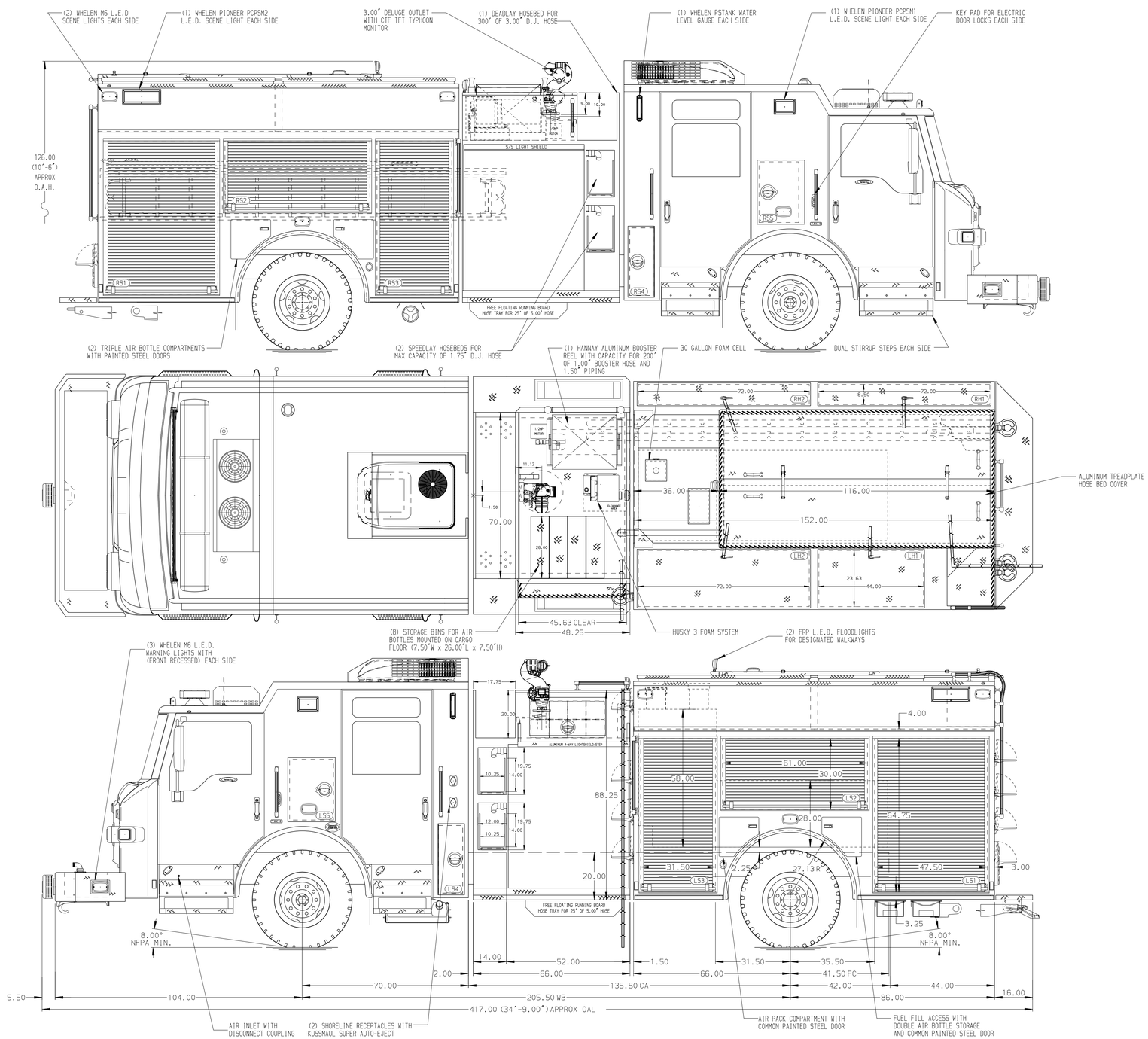

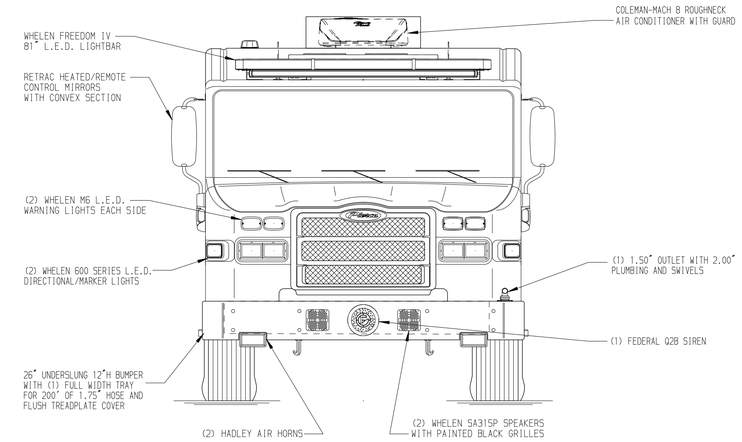

HOSEBED CAPACITIES

1. 300' OF 1.75" HOSE PACKS IN 90"L TRAY
2. 700' OF 5.00" D.J. POLY HOSE
3. 400' OF 2.50" D.J. POLY HOSE
4. OPEN HOSE BAY

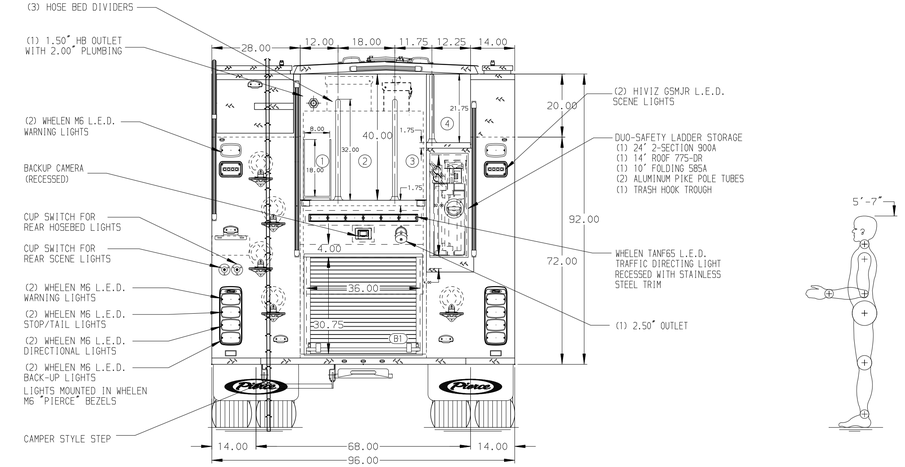

ALUMINUM BODY

NOTE

DIMENSIONS SHOWN ARE APPROXIMATE AND ARE SUBJECT TO MINOR DEVIATIONS AS MAY OCCUR OR BE NECESSARY IN CONSTRUCTION.
MINOR DETAILS NOT SHOWN.

1. DEF TANK MOUNTED UNDER CAB ON THE DRIVER'S SIDE
2. DUAL L.E.D. LIGHT STRIPS LOCATED IN HOSE BED
3. 3-DRAWER TOOL CABINET LOCATED PER ORDER
4. CTF LITTLE GIANT LADDER TO BE LOCATED IN COMPARTMENT LS2

REV	DATE	BY	CH
D	08JAN25	SAM	WKL
C	20DEC24	AKR	WKL
B	08NOV24	JJB	CHR
A	06SEP24	AKR	WKL

CHASSIS DATA
MAKE: PIERCE
MODEL: VELOCITY

Pierce MANUFACTURING INC.

TITLE: 2000GPM, 530G TANK, 500G WATER, 30G FOAM 152" PUMPER, MUX
FOR: FAIRVIEW FD FAIRVIEW, TEXAS
DWG NO.: 39357AD

JOB NO.	39357
SCALE	1:24
DATE	
DRAWN BY	AKR 23AUG24
CHECKED BY	WKL 23AUG24
SHEET SIZE	D
SHEET NO.	1 OF 1

View File Created 10-JAN-2025 07:26:12