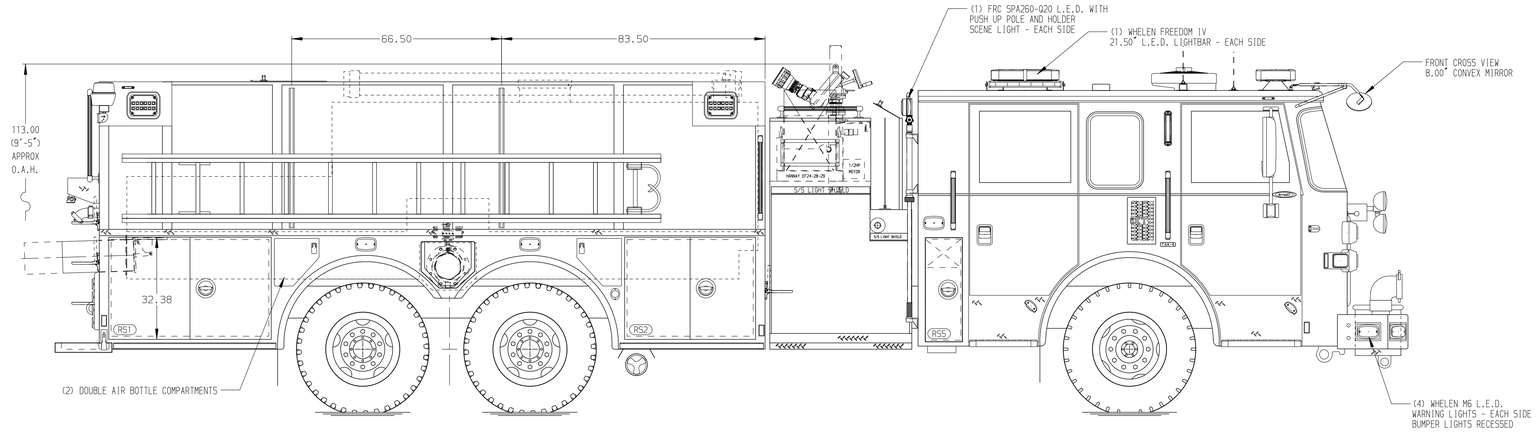

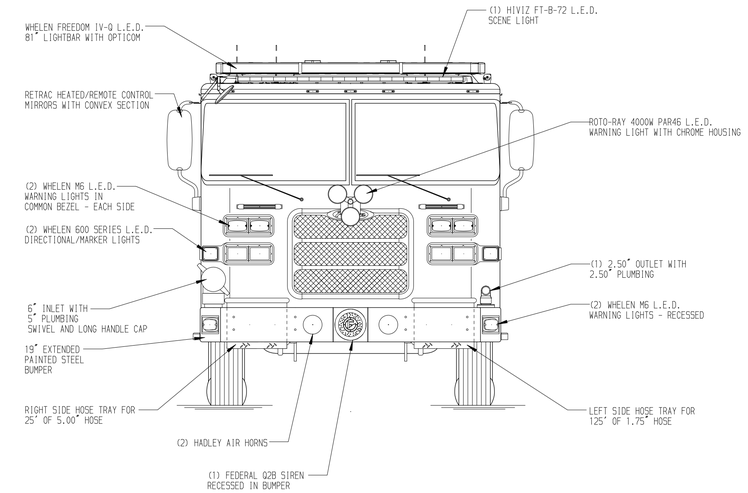

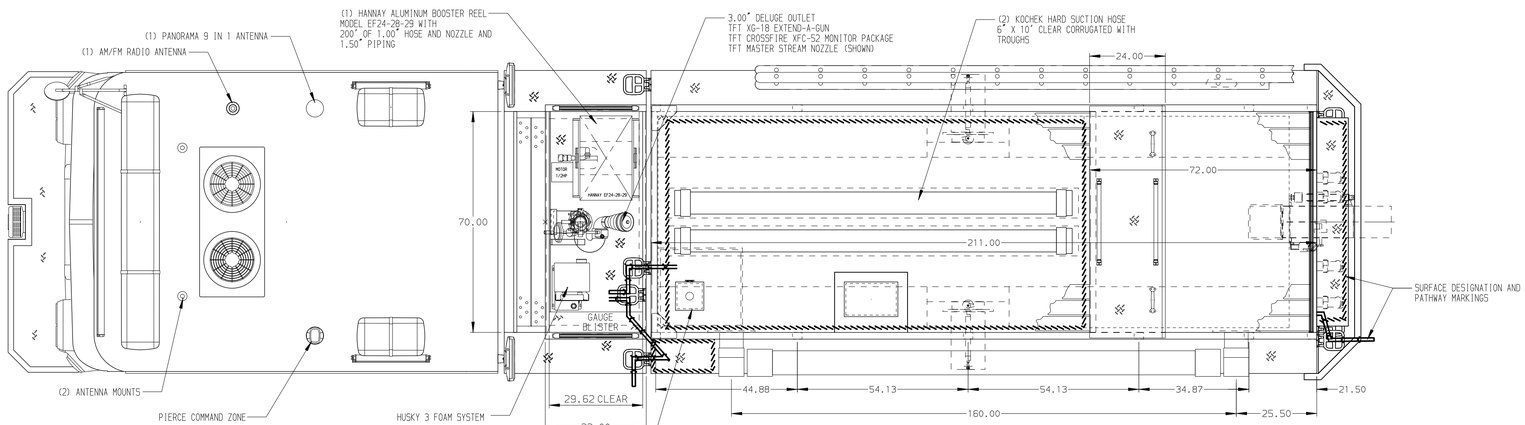

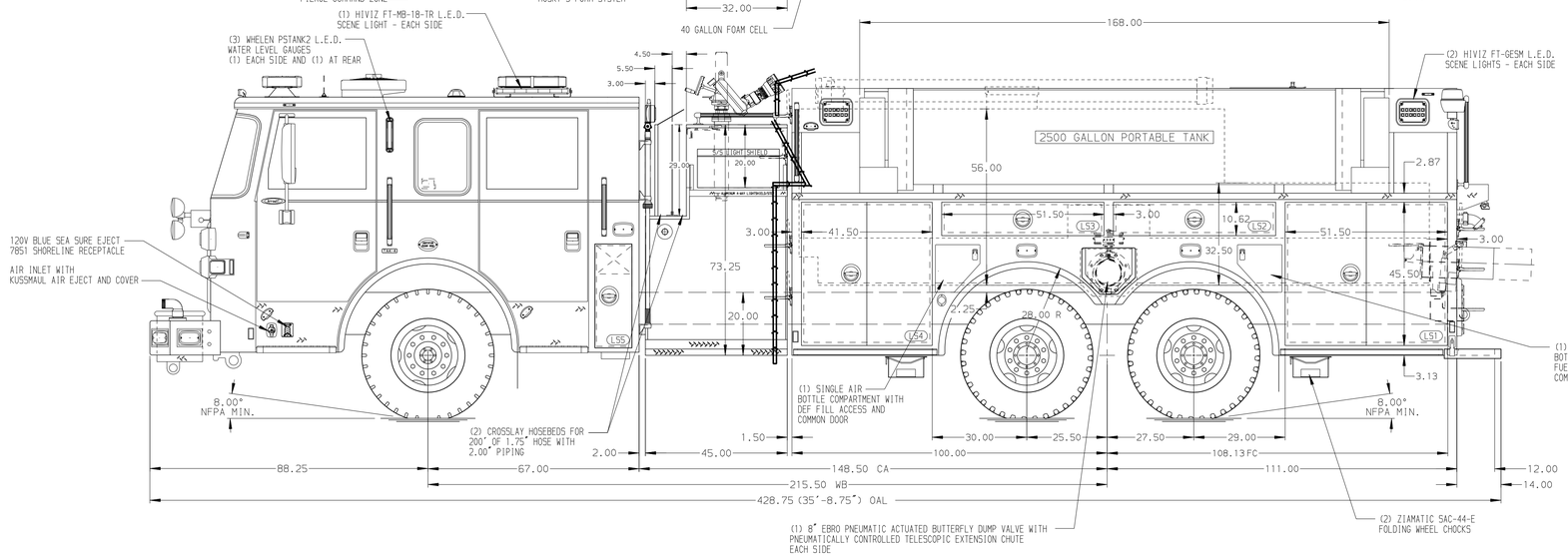

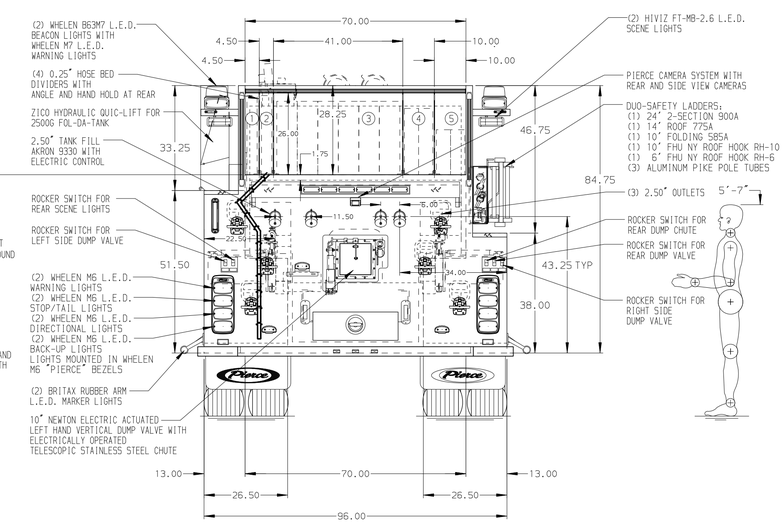

ALUMINUM BODY

SIDE ROLL AND FRONTAL IMPACT PROTECTION

NOTE

DIMENSIONS SHOWN ARE APPROXIMATE AND ARE SUBJECT TO MINOR DEVIATIONS AS MAY OCCUR OR BE NECESSARY IN CONSTRUCTION.
MINOR DETAILS NOT SHOWN.

1. ONSPOT AUTOMATIC TIRE CHAINS TO BE PROVIDED AT REAR
2. KUSSMAUL BATTERY CHARGER/AIR COMPRESSOR LOCATED BEHIND DIRIVER'S SEAT PER ORDER
3. BATTERY CHARGER INDICATOR DISPLAYED THROUGH WINDOW BEHIND DRIVER'S SEAT
4. TWO AMDOR ACCENT LIGHTS AY-LB-12HG020 LOCATED BEHIND GRILLE PER ORDER
5. ROLLED HOSE STORAGE RACK LOCATED IN COMPARTMENT PER ORDER
6. WHELEN SA315P SPEAKER LOCATED BEHIND FRONT BUMPER

REV	DATE	BY	CH
V	08SEP25	SAM	PHA
V	01AUG25	SAM	PHA
V	19MAY25	SAM	PHA
V	28MAR25	SAM	PHA

CHASSIS DATA
MAKE: PIERCE
MODEL: ARROW XT

Pierce MANUFACTURING INC.

TITLE: 1500GPM, 2040G TANK, 2000G WATER, 40G FOAM 211" TANKER/PUMPER, MUX
FOR: AMHERST FIRE DEPARTMENT AMHERST, VIRGINIA
DWG NO.: 39360AD

JOB NO.	39360
SCALE	1:24
DATE	
DRAWN BY	SAM 14NOV24
CHECKED BY	PHA 15NOV24
SHEET SIZE	D
SHEET NO.	1 OF 1

View File Created 08-SEP-2025 08:13:27