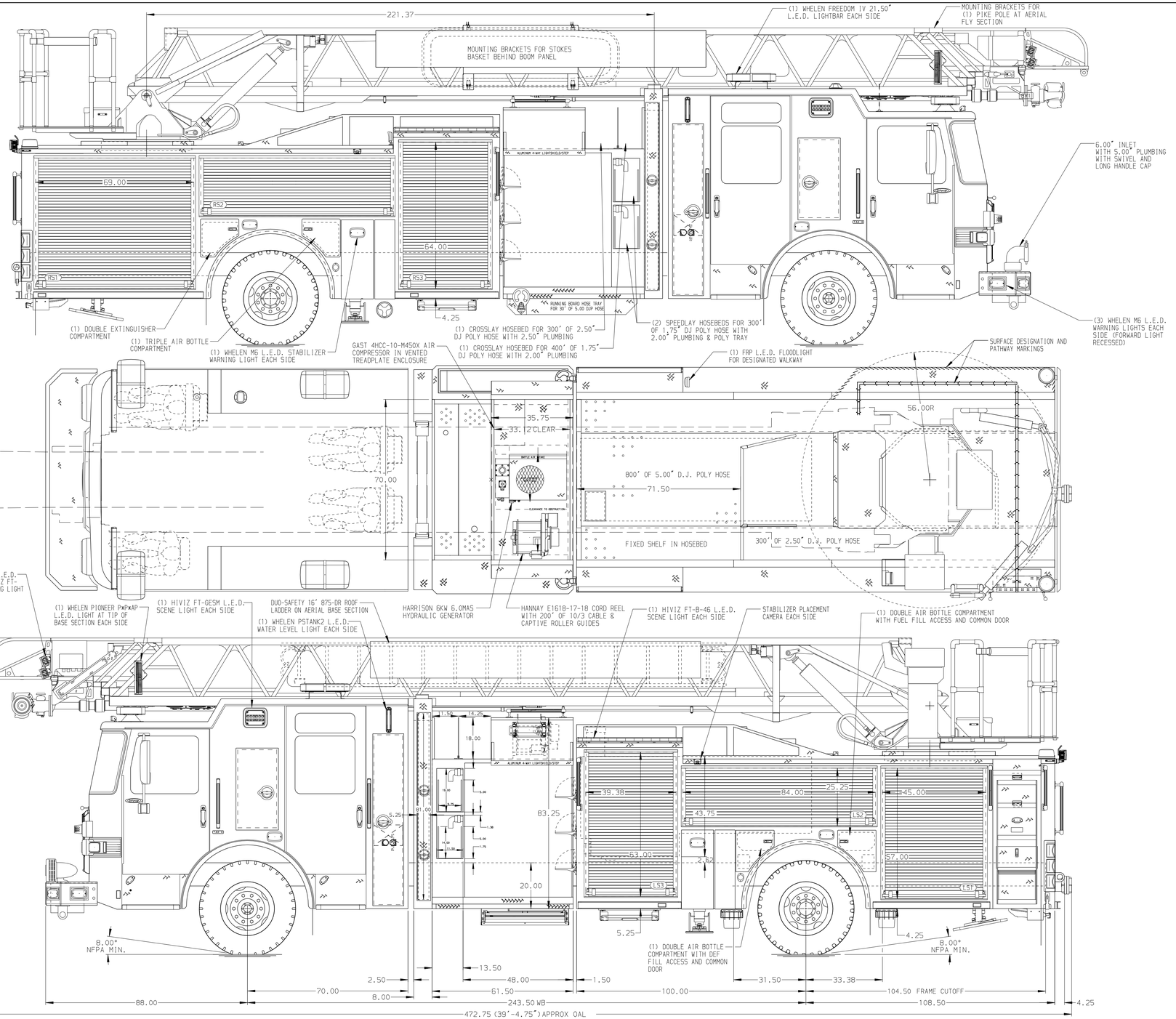

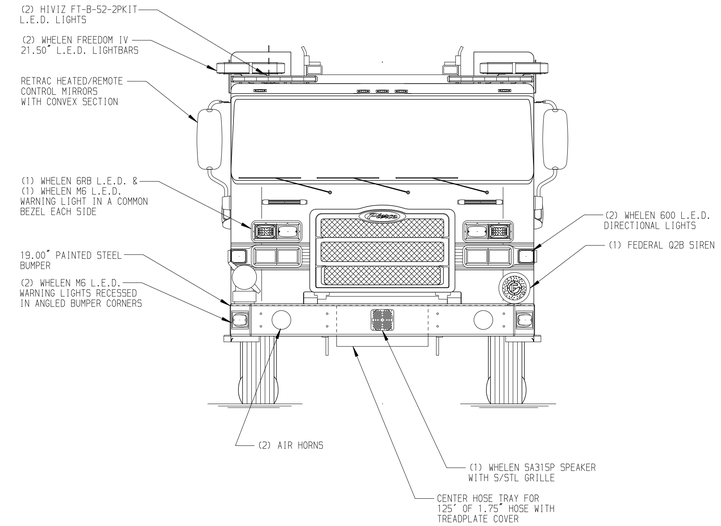

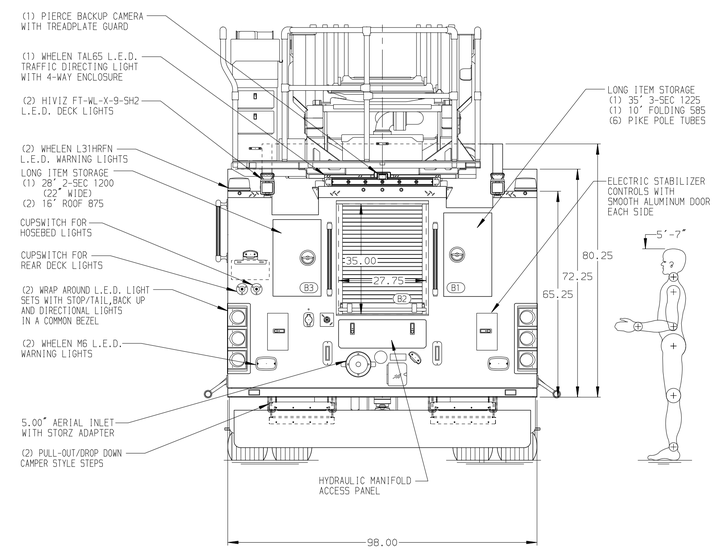

ALUMINUM BODY | SIDE ROLL AND FRONTAL IMPACT PROTECTION

NOTE

DIMENSIONS SHOWN ARE APPROXIMATE AND ARE SUBJECT TO MINOR DEVIATIONS AS MAY OCCUR OR BE NECESSARY IN CONSTRUCTION.
MINOR DETAILS NOT SHOWN.

1. NO LIMITED RETRACTION REQUIRED
2. ONE 1.50 OUTLET WITH 2.00 PIPING AND SWIVEL LOCATED IN CENTER BUMPER TRAY
3. SHORELINE RECEPTACLE WITH KUSSMAUL SUPER AUTO-EJECT LOCATED ON DRIVER SIDE REAR WALL
4. RECESSED AIR INLET WITH KUSSMAUL AIR EJECT LOCATED ON DRIVER SIDE REAR WALL
5. BATTERY CHARGER LOCATED PER ORDER
6. BATTERY CHARGE INDICATOR LOCATED ON DRIVER SEAT RISER
7. TECNIQ 4-SECTION RUNG LIGHTING
8. 1500 GPM HIGH FLOW WATERWAY
9. AC POWER TO AERIAL TIP
10. LIFTING EYE ROPE RESCUE ATTACHMENT AT AERIAL TIP

REV	DATE	BY	CH
1	11MAR25	ANZ	CLM
2	22JAN25	ANZ	CLM
3	01NOV24	ANZ	CLM

CHASSIS DATA
MAKE: PIERCE
MODEL: ENFORCER

Pierce MANUFACTURING INC.

TITLE: 107' ASCENDANT AERIAL LADDER AND BODY ASSEMBLY 500 GALLON WATER TANK
FOR: NEW HANOVER COUNTY FIRE SERVICE WILMINGTON, NC
DWG NO.: 39378AD-SH1

JOB NO.	39378
SCALE	1:24
DATE	020CT24
DRAWN BY	ANZ
CHECKED BY	CMS
230CT24	
SHEET SIZE	D
SHEET NO.	1 OF 2

View File Created 15-APR-2025 11:05:53