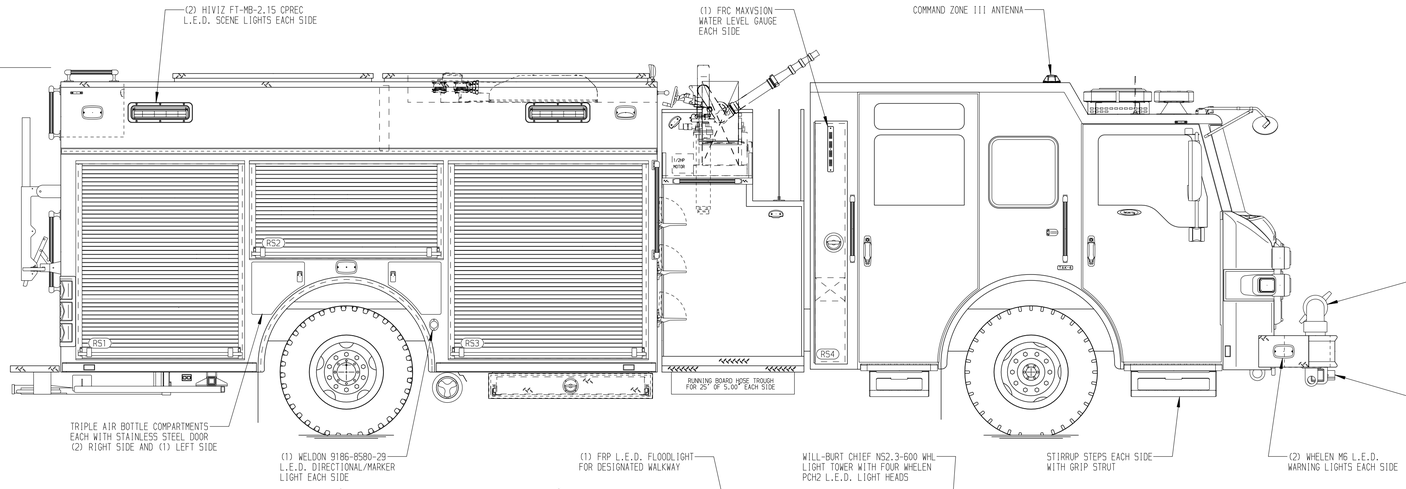

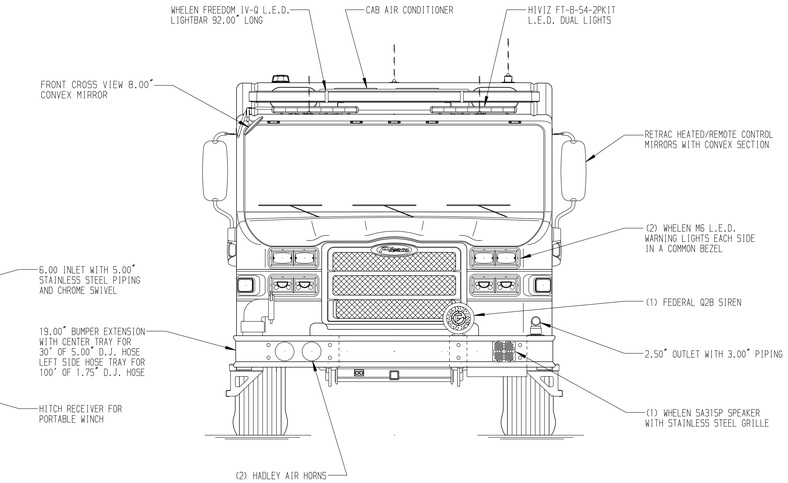

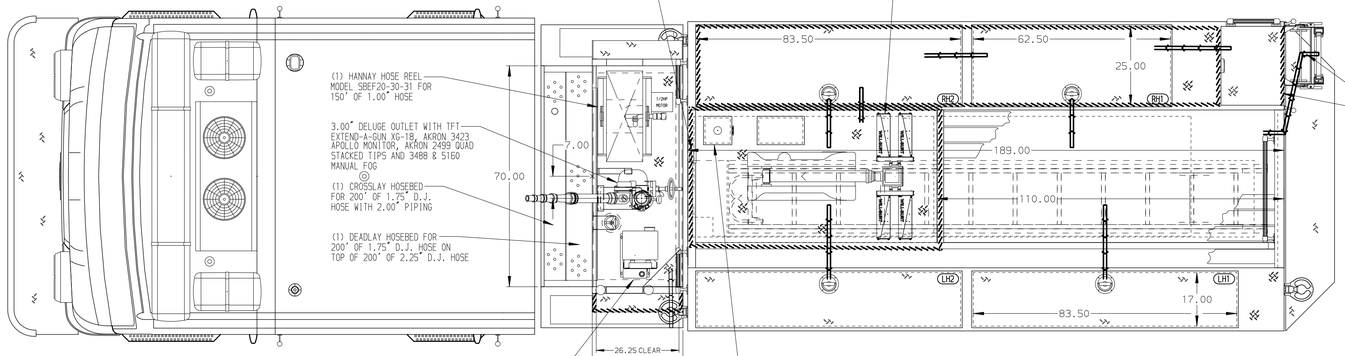

HOSEBED CAPACITIES

1. 775' OF 5.00" D.J.POLY HOSE
2. 200' OF 2.00" D.J.POLY HOSE
   400' OF 2.25" D.J.POLY HOSE
3. 200' OF 1.75" D.J.POLY HOSE
   400' OF 2.25" D.J.POLY HOSE
4. 200' OF 1.75" D.J.POLY HOSE
   400' OF 2.25" D.J.POLY HOSE

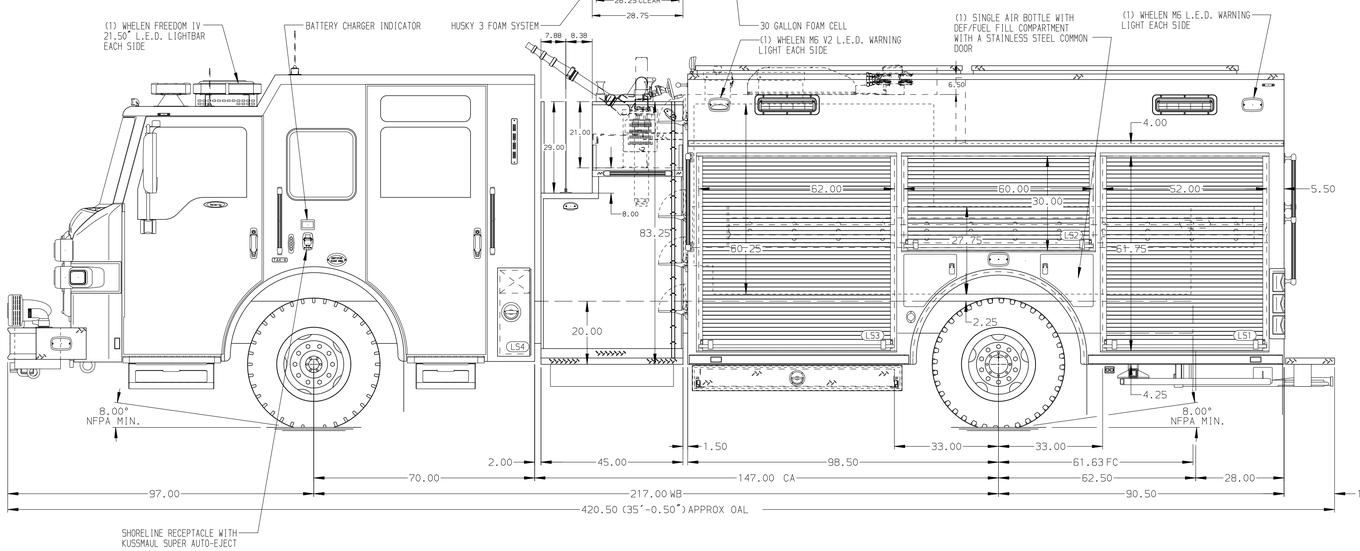

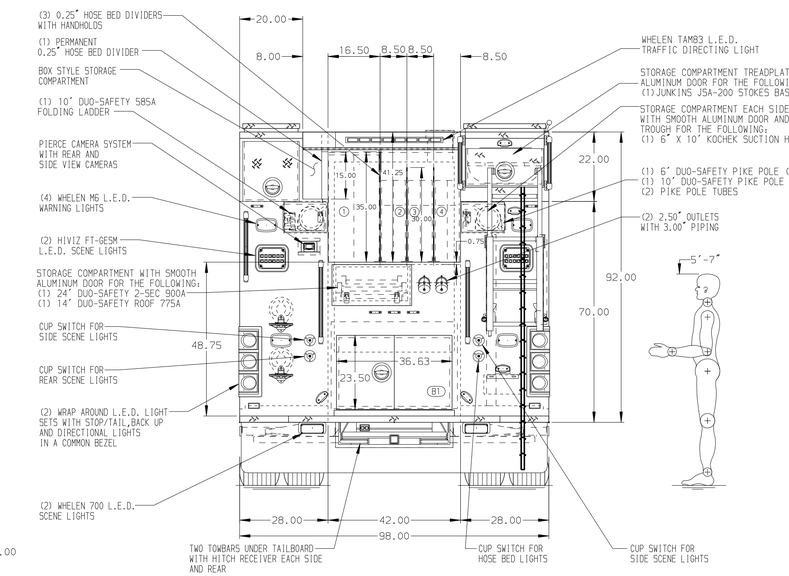

ALUMINUM BODY | MAXIMUM O.A.L. 421.00" | MAXIMUM O.A.H. 121.00" | SIDE ROLL AND FRONTAL IMPACT PROTECTION

NOTE

DIMENSIONS SHOWN ARE APPROXIMATE AND ARE SUBJECT TO MINOR DEVIATIONS AS MAY OCCUR OR BE NECESSARY IN CONSTRUCTION.
MINOR DETAILS NOT SHOWN.

1. BATTERY CHARGER AND AIR COMPRESSOR LOCATED BEHIND DRIVER SEAT
2. DUAL L.E.D. LIGHT STRIPS LOCATED IN HOSE BED
3. AIR INLET/OUTLET WITH DISCONNECT FITTING AND 1/4 TURN VALVE AT DRIVER'S STEP WELL
4. 9,000# WARN PORTABLE WINCH WITH 100' OF NYLON REINFORCED SYNTHETIC ROPE
5. MIC AND SPEAKER COMPARTMENT ADJACENT TO LEFT SIDE PUMP PANEL - SIZE TBD
6. WHEEL CHOCKS AND MOUNTING BRACKETS INSTALLED/MOUNTED BY FIRE DEPARTMENT (SHIPPED LOOSE)

REV	DATE	BY	CH
D	08JUL25	BTH	CSH
C	03FEB25	BTH	CSH
B	10JAN25	AMI	CSH
A	16OCT24	BTH	SJS

CHASSIS DATA
MAKE: PIERCE
MODEL: VELOCITY

Pierce MANUFACTURING INC.

TITLE: 2000GPM, 750G TANK, 720G WATER, 30G FOAM 189" HDRP, MUX
FOR: SAYVILLE FIRE DISTRICT SAYVILLE, NEW YORK
DWG NO.: 39379AD-SH1

JOB NO.	39379
SCALE	1:24
DATE	
DRAWN BY	BTH
	08OCT24
CHECKED BY	SJS
	09OCT24
SHEET SIZE	D
SHEET NO.	1 OF 2

View File Created 08-JUL-2025 10:18:40