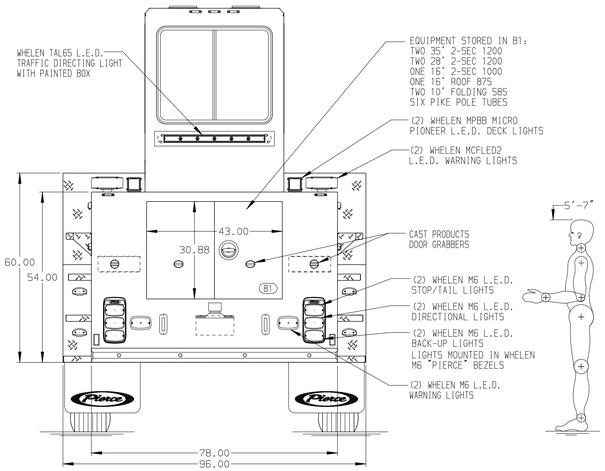

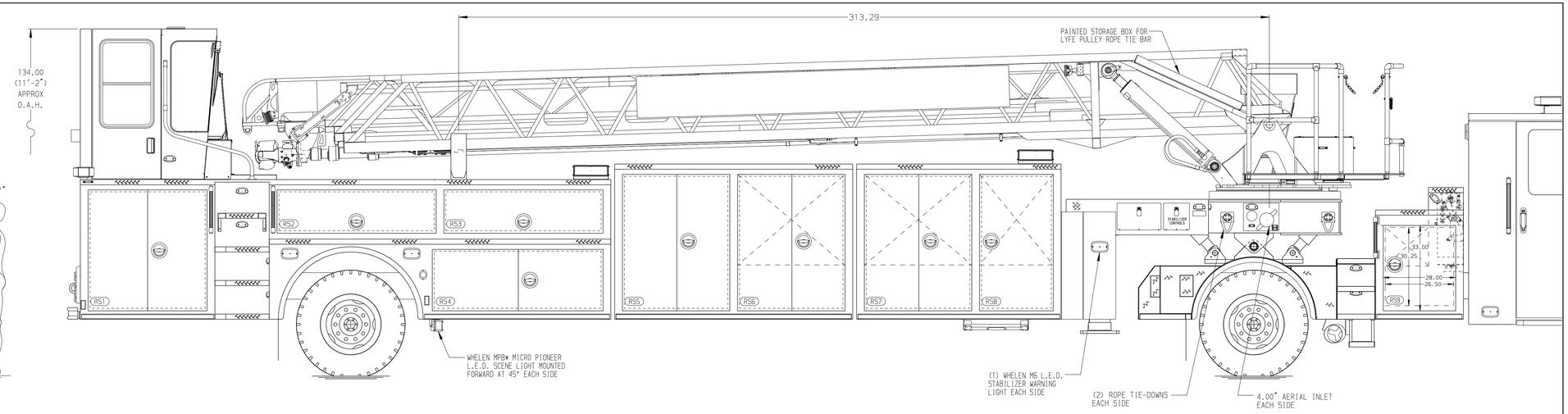

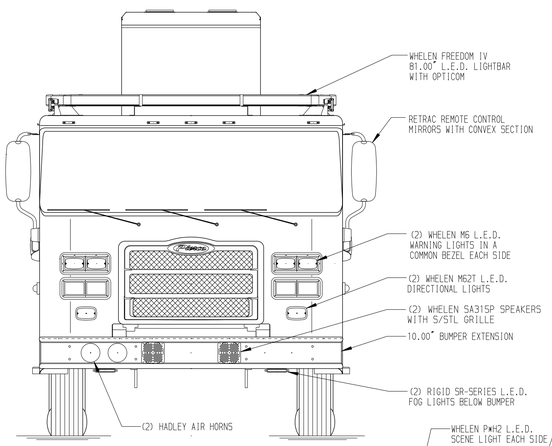

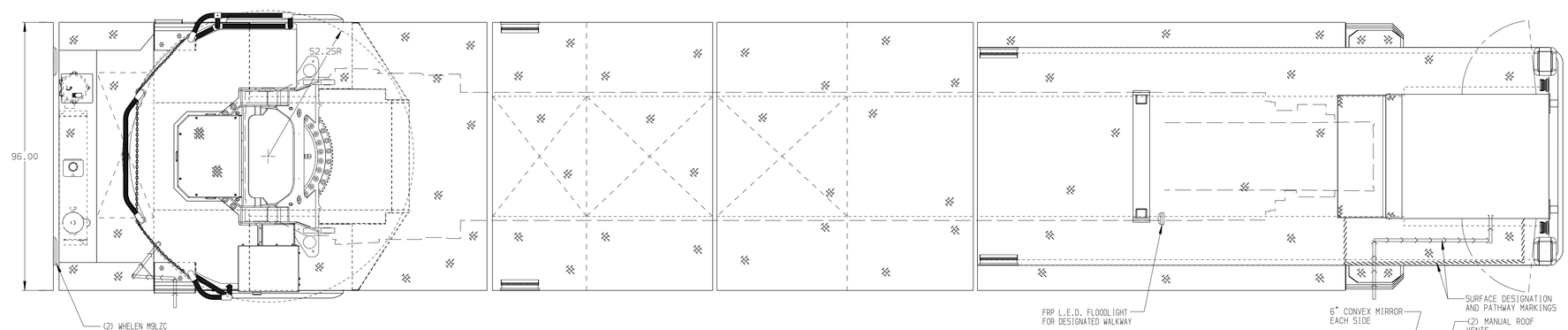

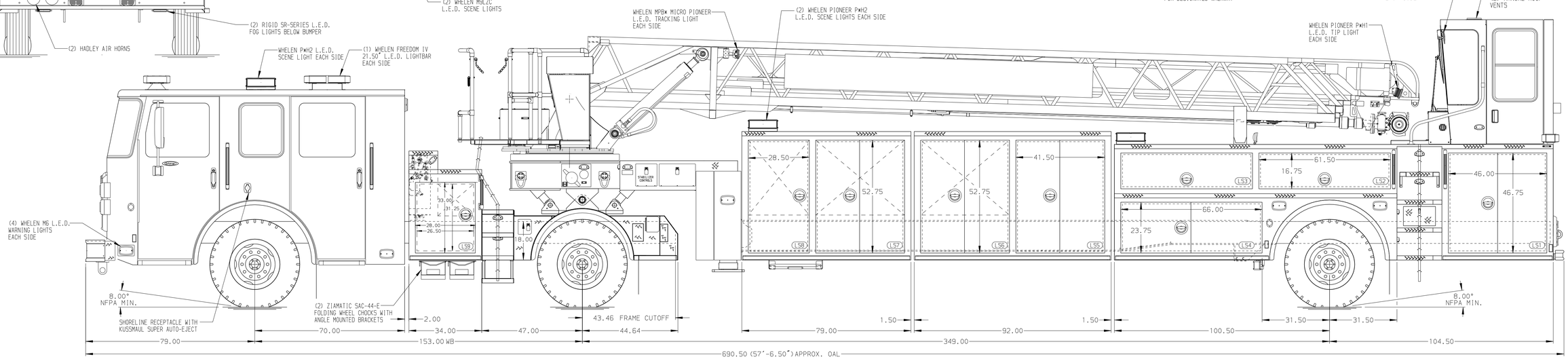

ALUMINUM BODY

NOTE

DIMENSIONS SHOWN ARE APPROXIMATE AND ARE SUBJECT TO MINOR DEVIATIONS AS MAY OCCUR OR BE NECESSARY IN CONSTRUCTION.
MINOR DETAILS NOT SHOWN.

1. BATTERY CHARGER INDICATOR LOCATED ON DRIVER'S SEAT RISER
2. ALUMINUM TREADPLATE ON CREW CAB ROOF ONLY
3. AIR INLET WITH DISCONNECT COUPLING LOCATED AT DRIVER'S SIDE SEAT RISER
4. LYFE PULLEY RESCUE SYSTEM
5. LIFTING EYE ROPE RESCUE ATTACHMENT AT AERIAL TIP
6. 2-WAY INTERCOM SYSTEM BETWEEN AERIAL TIP AND TURNTABLE
7. REMOTE LADDER CONTROLS AT AERIAL TIP
8. TRIDENT FOLDING STEPS ON AERIAL DEVICE
9. SHORTENED AERIAL EGRESS AND WATERWAY
10. AERIAL BOOM SUPPORT NOT RAISED

REV	DATE	BY	CH
7	30SEP24	SHU	BSE
6	16AUG24	SHU	BSE

CHASSIS DATA
MAKE: PIERCE
MODEL: ENFORCER

Pierce MANUFACTURING INC.

TITLE: 107' ASCENDANT TILLER AND BODY ASSY
NO PUMP/NO TANK

FOR: BAKERSFIELD FIRE DEPARTMENT
BAKERSFIELD, CALIFORNIA

DWG NO.: 39417AD-SH1

JOB NO.	39417
SCALE	1:24
DATE	
DRAWN BY	SHU 20JUN24
CHECKED BY	BSE 27JUN24
SHEET SIZE	D
SHEET NO.	1 OF 2

View File Created 04-OCT-2024 13:33:38