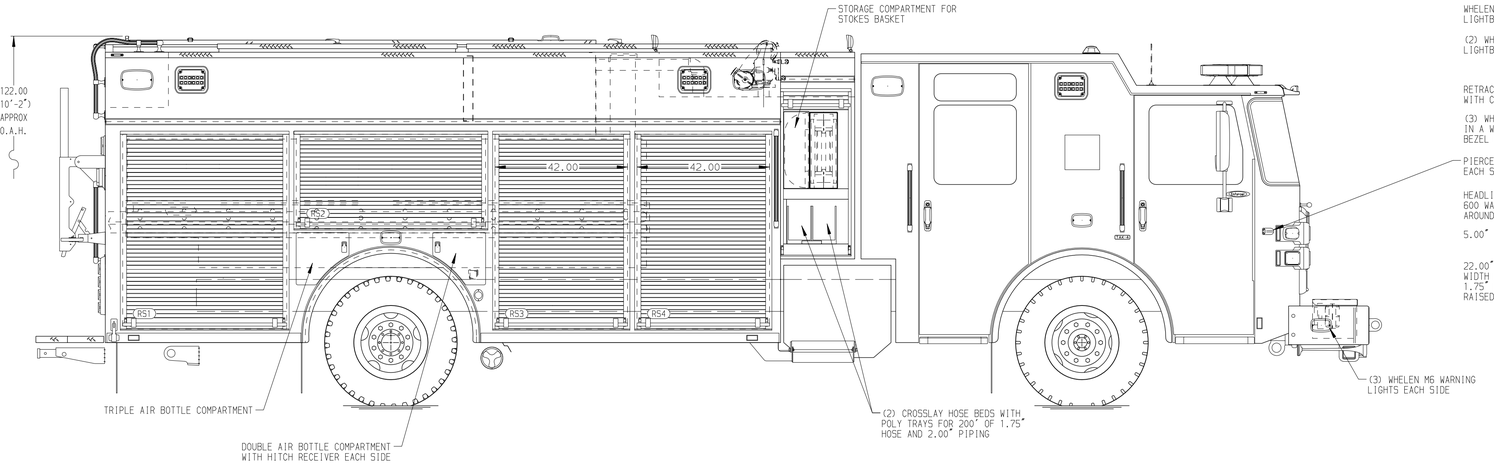

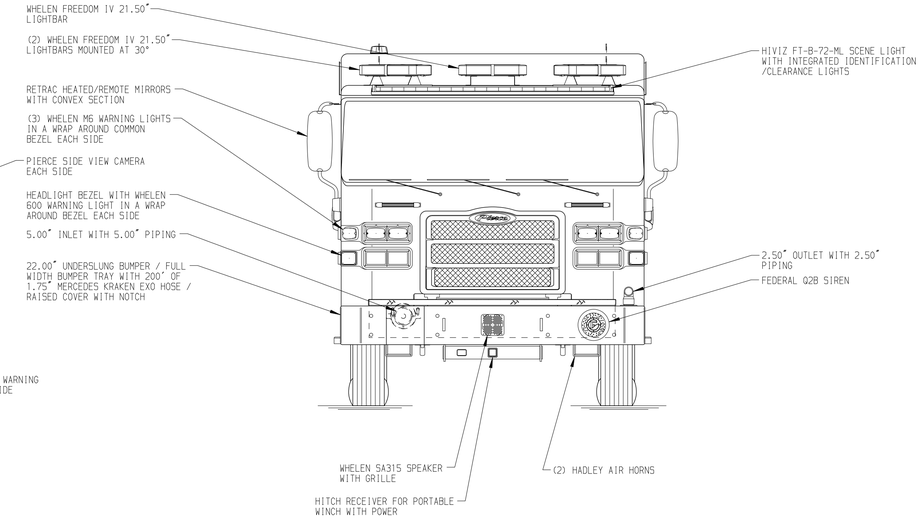

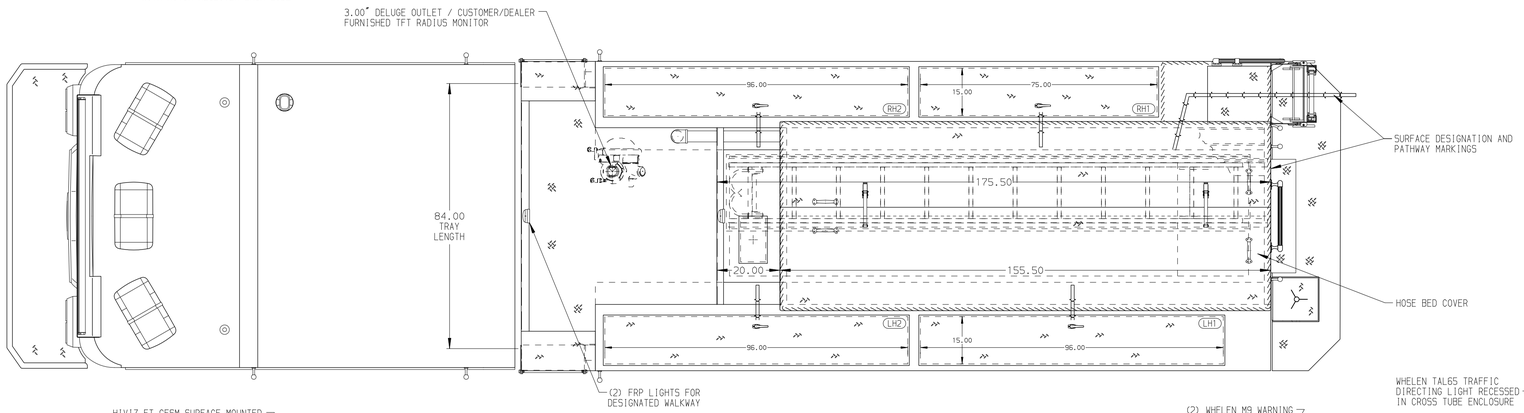

HOSEBED CAPACITIES

1. 350' OF 3.00" MERCEDES KRAKEN EXO HOSE
2. 1200' OF 5.00" D.J. POLY HOSE
3. 250' OF 2.50" MERCEDES KRAKEN EXO HOSE (PRE-CONNECTED)

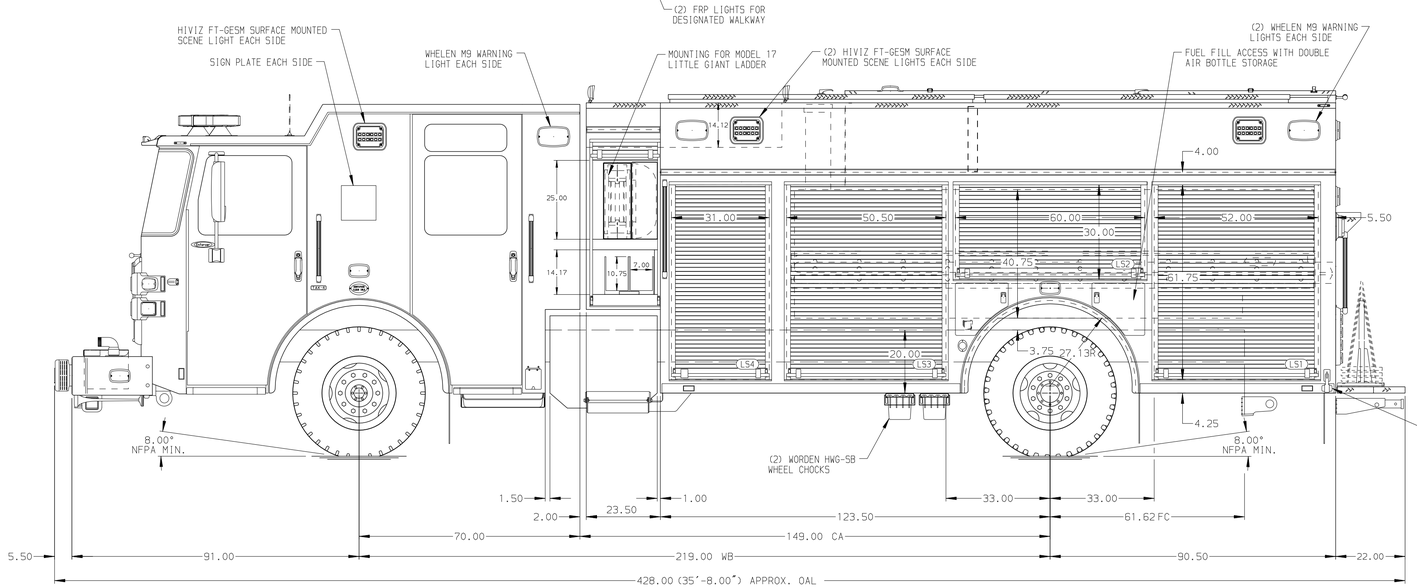

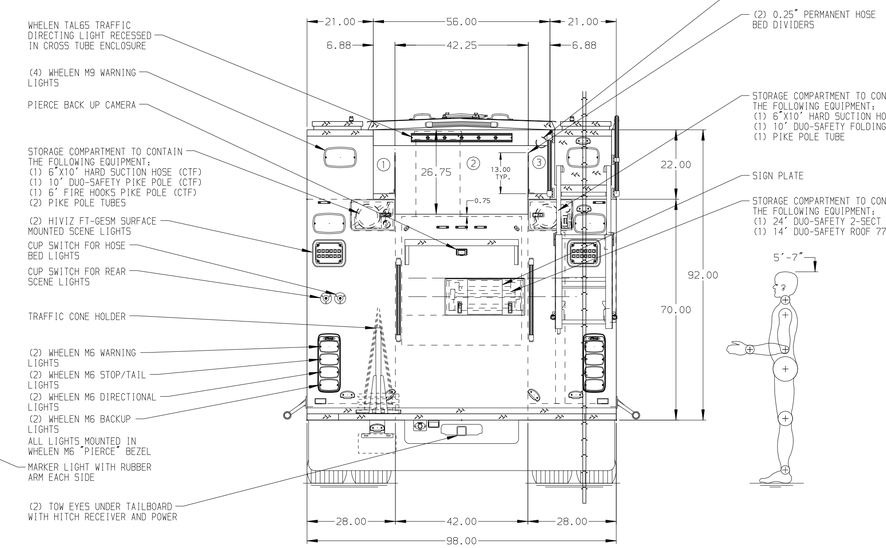

ALUMINUM BODY

NOTE

DIMENSIONS SHOWN ARE APPROXIMATE AND ARE SUBJECT TO MINOR DEVIATIONS AS MAY OCCUR OR BE NECESSARY IN CONSTRUCTION.
MINOR DETAILS NOT SHOWN.

1. AIR INLET WITH DISCONNECT FITTING LOCATED PER ORDER
2. BATTERY CHARGER LOCATED PER ORDER
3. BATTERY CHARGER INDICATOR LOCATED PER ORDER
4. 120V SHORELINE RECEPTACLE LOCATED PER ORDER
5. TEN FULL WIDTH/DEPTH ADJUSTABLE SHELVES WITH SIDES LOCATED PER ORDER
6. TWO ADJUSTABLE FULL WIDTH/DEPTH TILT/SLIDE-OUT TRAYS LOCATED PER ORDER
7. ONE FLOOR MOUNTED TWO-WAY UTILITY TRAY WITH SIDES LOCATED PER ORDER
8. TWO ADJUSTABLE TOOLBOARDS WITH PEGBOARD PATTERN MOUNTED TO SLIDE-OUT TRAY LOCATED PER ORDER
9. ONE CTECH THREE DRAWER CABINET LOCATED PER ORDER
10. TWO SWING-OUT TOOLBOARDS WITH PEGBOARD PATTERN LOCATED PER ORDER
11. TWO VERTICAL ADJUSTABLE PARTITIONS LOCATED PER ORDER
12. PEGBOARD ON SIDE WALL PER ORDER
13. PEGBOARD WITH TRACKS ON REAR WALL LOCATED PER ORDER
14. ONE RECEPTACLE BOX WITH (4) RECEPTACLES IN CAB LOCATED PER ORDER
15. ONE 4-PLACE RECEPTACLE BOX IN REAR BODY COMPARTMENT PER ORDER
16. ONE AIR BAG RACK FOR HOLDING (3) AIR BAGS LOCATED PER ORDER

REV	DATE	BY	CH
B	16JAN25	BST	JGO
A	31OCT24	CDU	CDU

CHASSIS DATA	
MAKE	PIERCE
MODEL	ENFORCER

Pierce MANUFACTURING INC.

TITLE	1500GPM,750G WATER TANK 214" PUC RESCUE BODY,MUX
FOR	BEAVERCREEK TOWNSHIP FIRE DEPARTMENT BEAVERCREEK,OHIO
DWG NO.	39473AD

JOB NO.	39473
SCALE	1:24
DATE	
DRAWN BY	BST 140CT24
CHECKED BY	CDU 170CT24
SHEET SIZE	D
SHEET NO.	1 OF 1

View File Created 17-JAN-2025 09:24:25