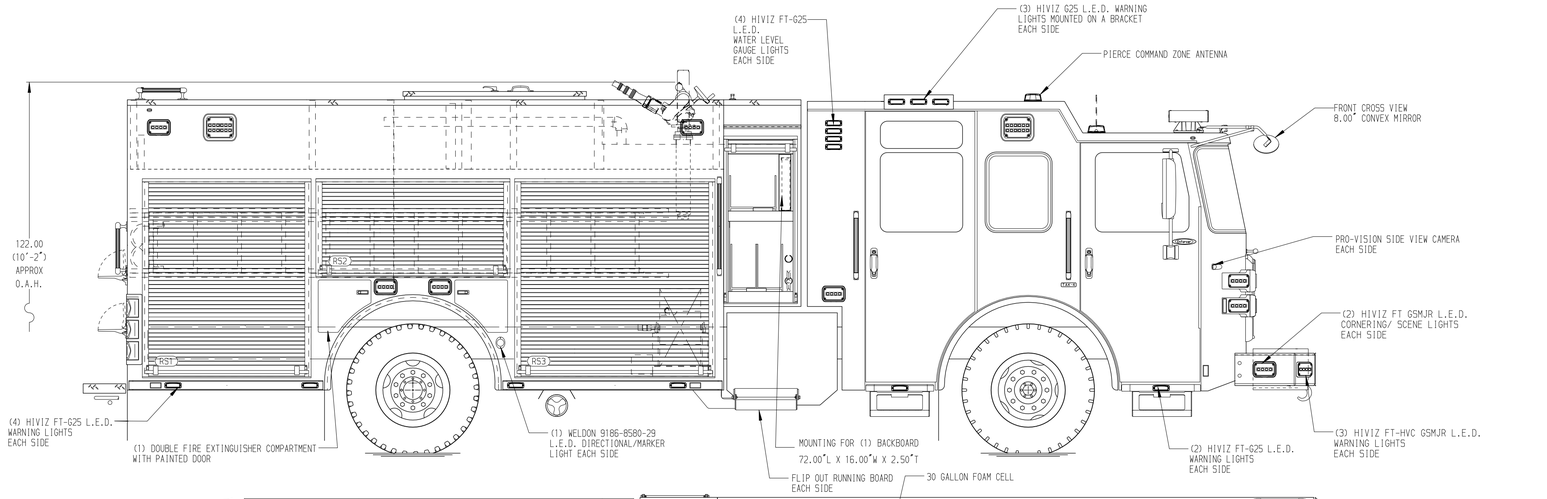

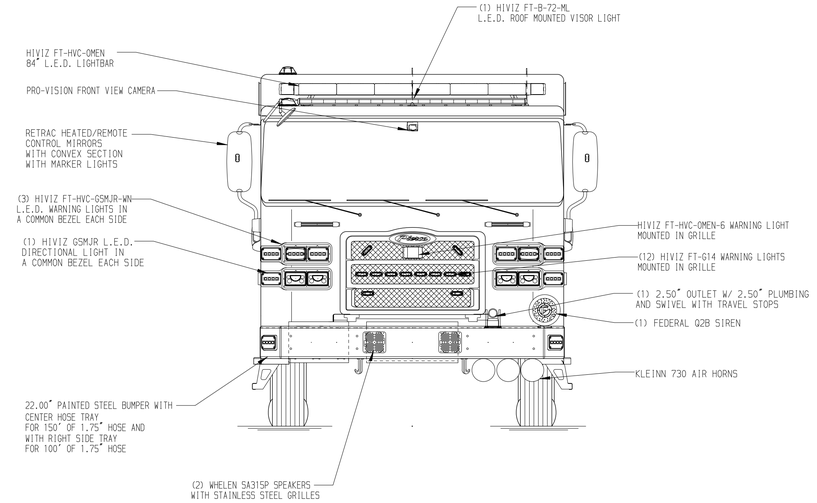

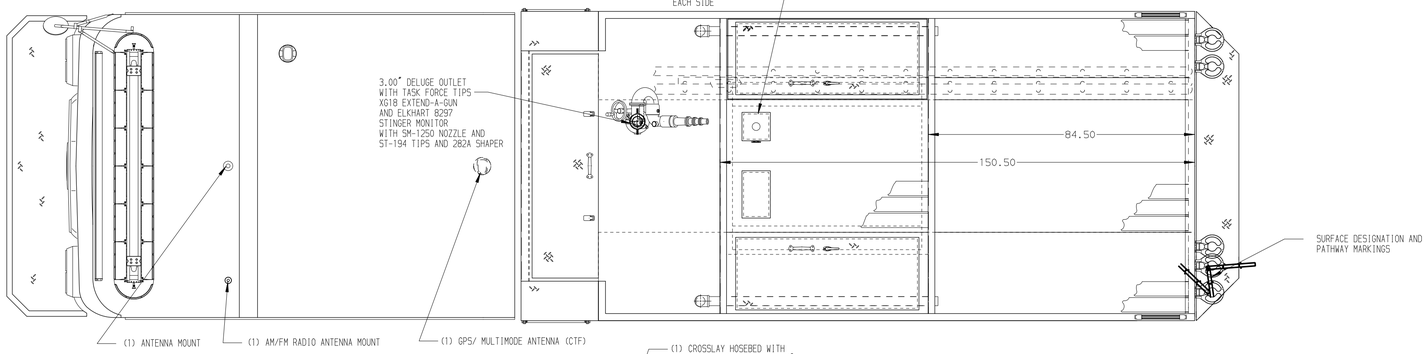

HOSEBED CAPACITIES

1 - 300' OF 2.25" DJP HOSE
2 - 200' OF 1.75" DJP HOSE
3 - 600' OF 3.00" DJP HOSE
4 - 1000' OF 5.00" DJP HOSE
5 - 200' OF 1.75" DJP HOSE
6 - 300' OF 1.75" DJP HOSE

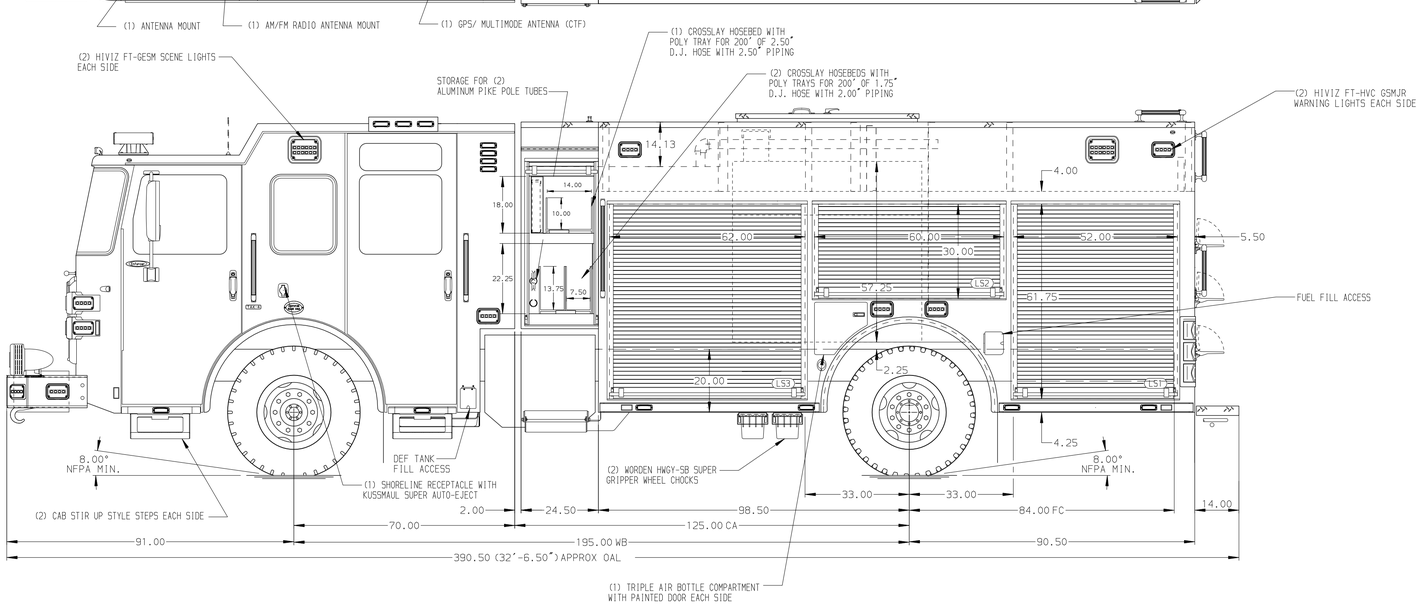

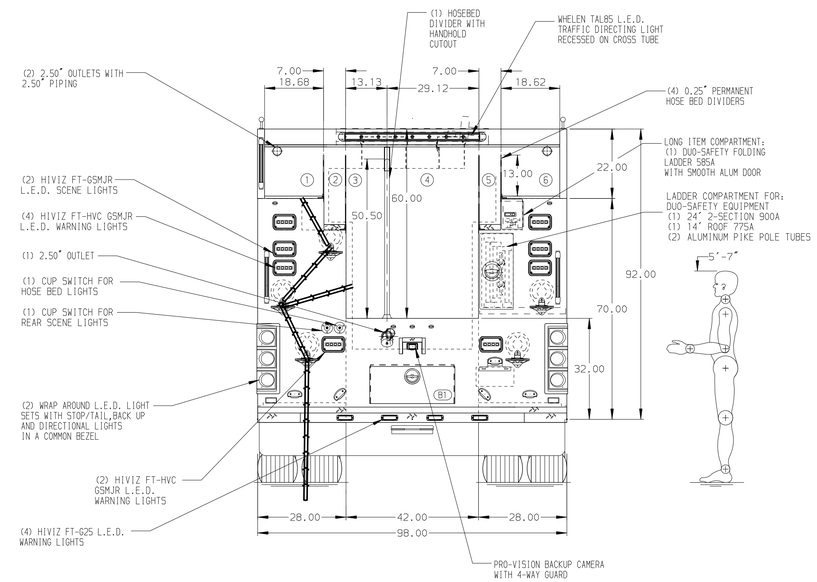

ALUMINUM BODY

NOTE

DIMENSIONS SHOWN ARE APPROXIMATE AND ARE SUBJECT TO MINOR DEVIATIONS AS MAY OCCUR OR BE NECESSARY IN CONSTRUCTION.
MINOR DETAILS NOT SHOWN.

1. AIR INLET/OUTLET WITH DISCONNECT COUPLING LOCATED IN LS STEP WELL
2. BATTERY CHARGER LOCATED BEHIND DRIVER'S SEAT
3. ONE HANNAY MODEL EF 20-25-26 STEEL BOOSTER REEL FOR 200' OF 0.75" HOSE IN RS3

REV	DATE	BY	CH
7	06AUG25	LST	ZWE
6	25FEB25	LST	ZWE
5	17JAN25	LST	ZWE
4	21NOV24	LST	KLH

CHASSIS DATA: MAKE PIERCE; MODEL ENFORCER

Pierce MANUFACTURING INC.

TITLE: 2000 GPM, 530 G TANK, 500 G WATER, 30 G FOAM CELL 189" PUC BODY, MUX

FOR: CITY OF SANDY SPRINGS, SANDY SPRINGS, GEORGIA

DWG NO.: 39502AD

JOB NO.	SCALE	DRAWN BY	CHECKED BY	SHEET SIZE	SHEET NO.
39502 01-02	1:24	LST	KLH	D	1 OF 1

DATE: 13NOV24 / 14NOV24

View File Created 07-AUG-2025 07:16:45