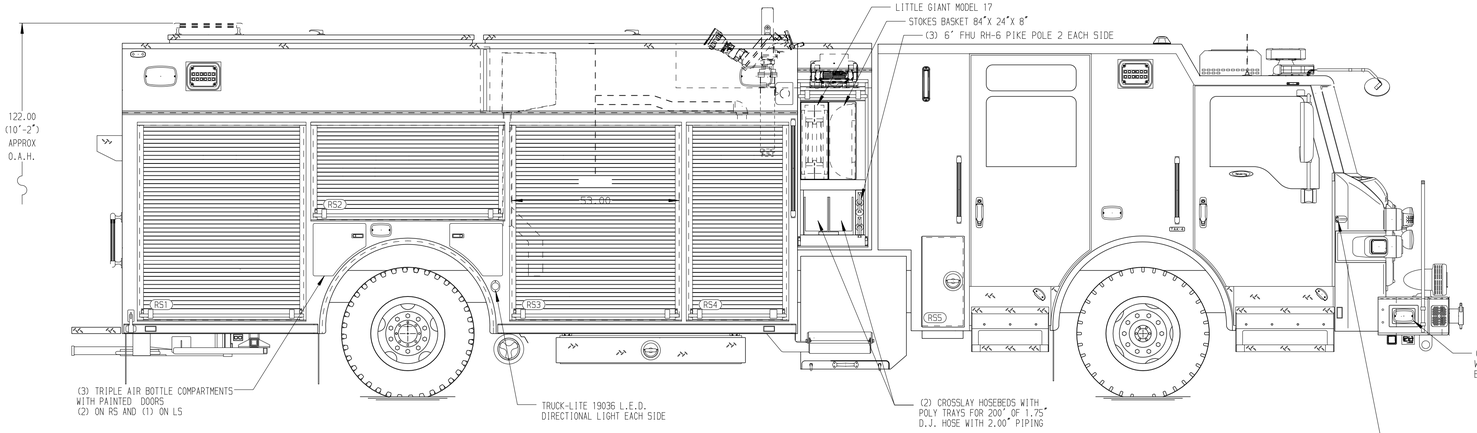

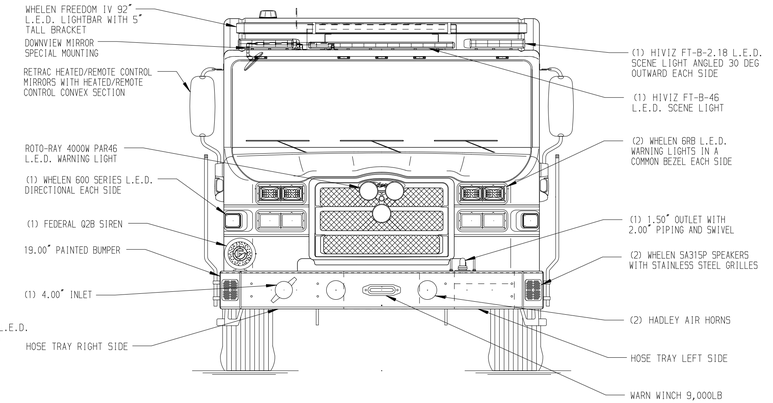

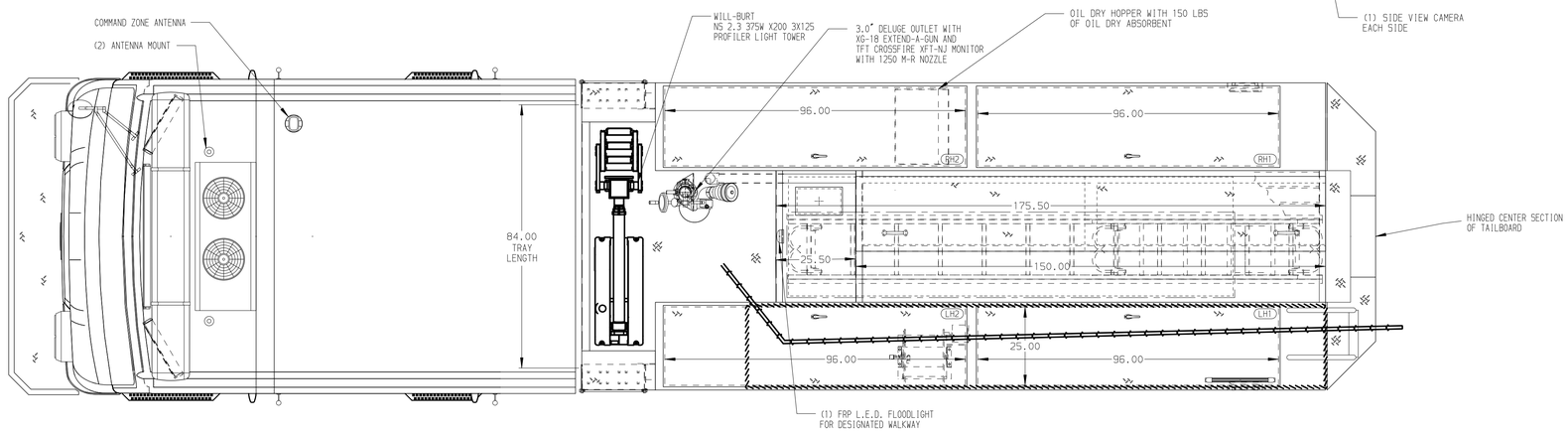

HOSEBED CAPACITIES

1. 425' OF 4.00" D.J. POLY HOSE
2. 200' OF 2.50" D.J. POLY HOSE
3. 200' OF 2.50" D.J. POLY HOSE

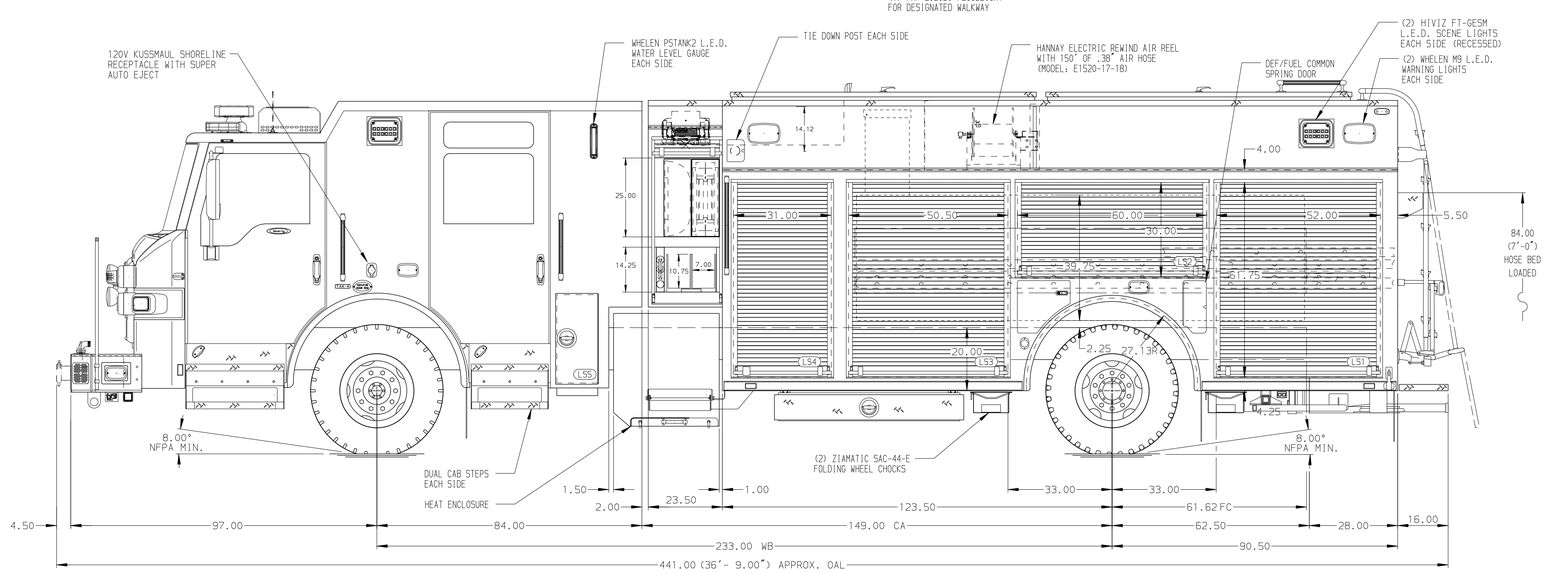

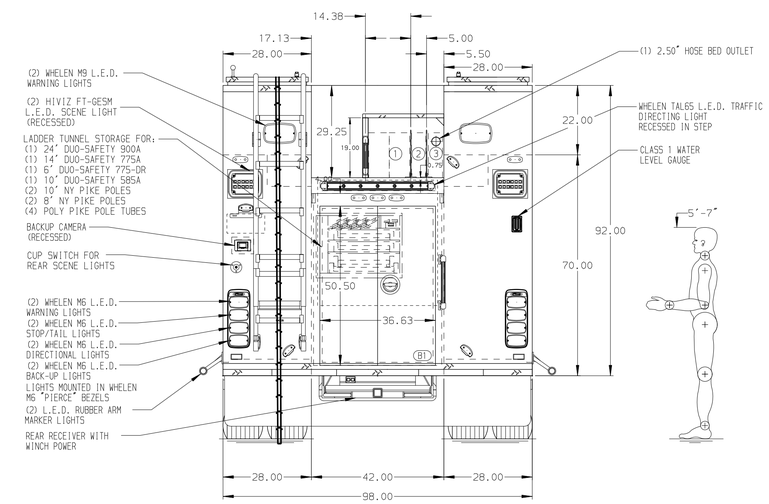

ALUMINUM BODY

NOTE

DIMENSIONS SHOWN ARE APPROXIMATE AND ARE SUBJECT TO MINOR DEVIATIONS AS MAY OCCUR OR BE NECESSARY IN CONSTRUCTION.
MINOR DETAILS NOT SHOWN.

REV	DATE	BY	CH
7	23JUL25	KLE	EGO
6	20JUN25	PHA	PHA
5	15MAR25	KLE	EGO
4	24MAR25	KLE	EGO
3	20MAR25	KLE	EGO
2	05MAR25	KLE	EGO

CHASSIS DATA — MAKE: PIERCE — MODEL: VELOCITY

Pierce MANUFACTURING INC.

TITLE: 1500GPM, 500G TANK
214" PUC RESCUE BODY, MUX

FOR: JOHNSTON GRIMES METROPOLITIAN FIRE DEPT.
JOHNSTON, IOWA

DWG NO.: 39516AD

JOB NO.	39516
SCALE	1:24
DATE	
DRAWN BY	JWR
14NOV24	
CHECKED BY	EGO
18NOV24	
SHEET SIZE	D
SHEET NO.	1 OF 1

View File Created 14-AUG-2025 14:10:45