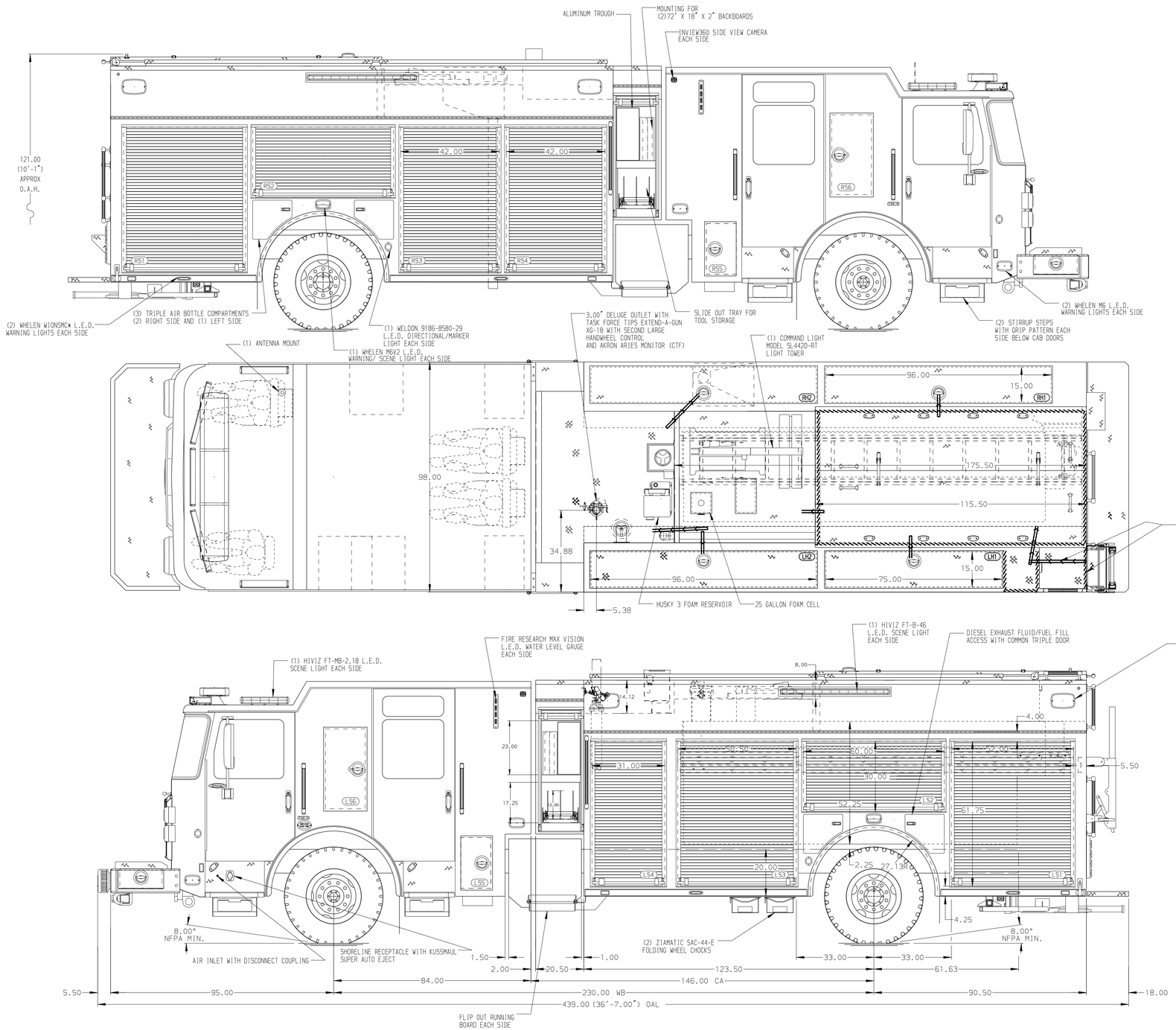


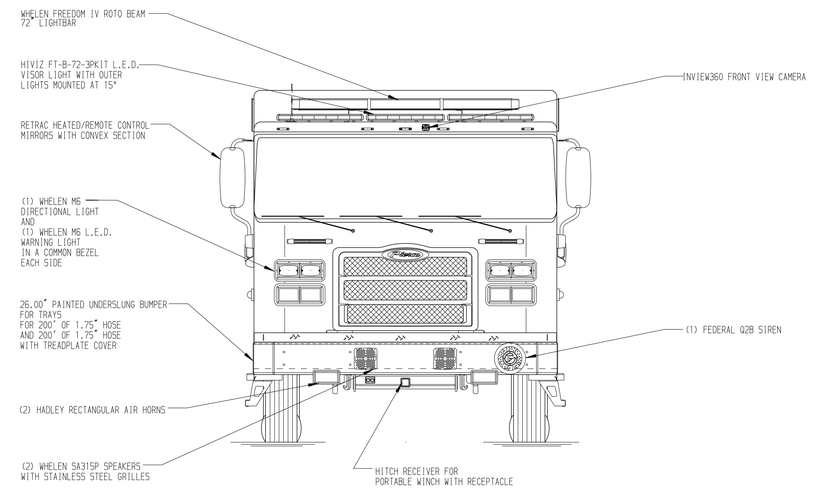


HOSEBED CAPACITIES

1. 175' OF 2.50" HOSE
2. 750' OF 5.00" HOSE
3. 600' OF 3.00" HOSE

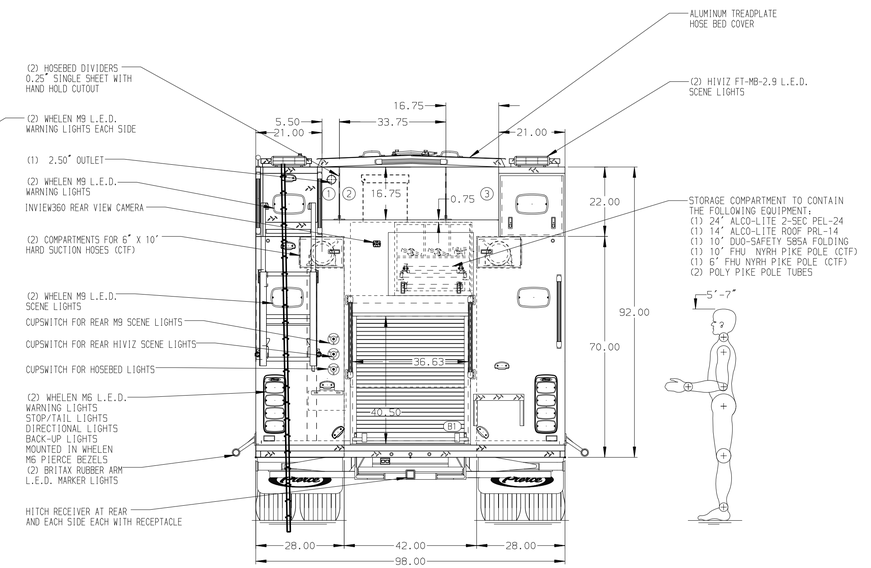


ALUMINUM BODY

NOTE

DIMENSIONS SHOWN ARE APPROXIMATE AND ARE SUBJECT TO MINOR DEVIATIONS AS MAY OCCUR OR BE NECESSARY IN CONSTRUCTION.
MINOR DETAILS NOT SHOWN.

1. VANNER LIFESINE INVERTER/ BATTERY CHARGER INDICATOR MOUNTED BEHIND THE DRIVER'S SEAT

| REV | DATE | BY | CH |
|---|---|---|---|
| 3 | 24FEB25 | LST | JJR |
| 2 | 23JAN25 | LST | JJR |
| 1 | 07NOV24 | LST | JJR |

CHASSIS DATA
MAKE: PIERCE
MODEL: ENFORCER

**Pierce MANUFACTURING INC.**

TITLE: 1500 GPM, 775 G TANK, 750 G WATER, 25 G FOAM CELL 214" PUC BODY, HARD WIRED
FOR: VOLUSIA COUNTY FIRE RESCUE DELAND, FLORIDA
DWG NO.: 39521AD-SH1

| | |
|---|---|
| JOB NO. | 39521 |
| SCALE | 1:24 |
| DATE | |
| DRAWN BY | LST 06NOV24 |
| CHECKED BY | JJR 07NOV24 |
| SHEET SIZE | D |
| SHEET NO. | 1 OF 2 |

View File Created 12-MAR-2025 13:41:49