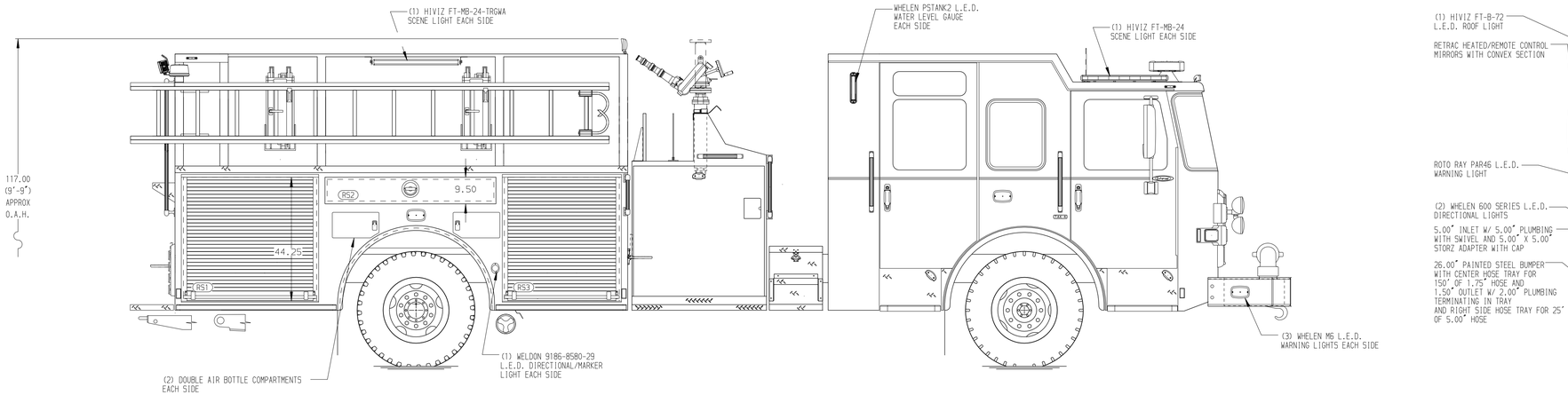


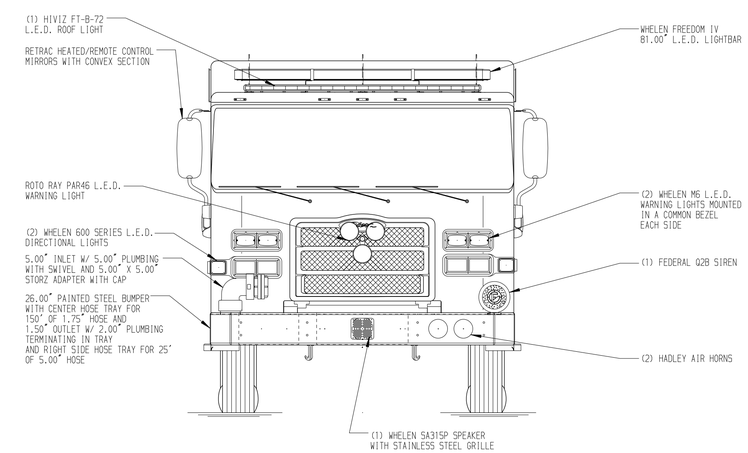


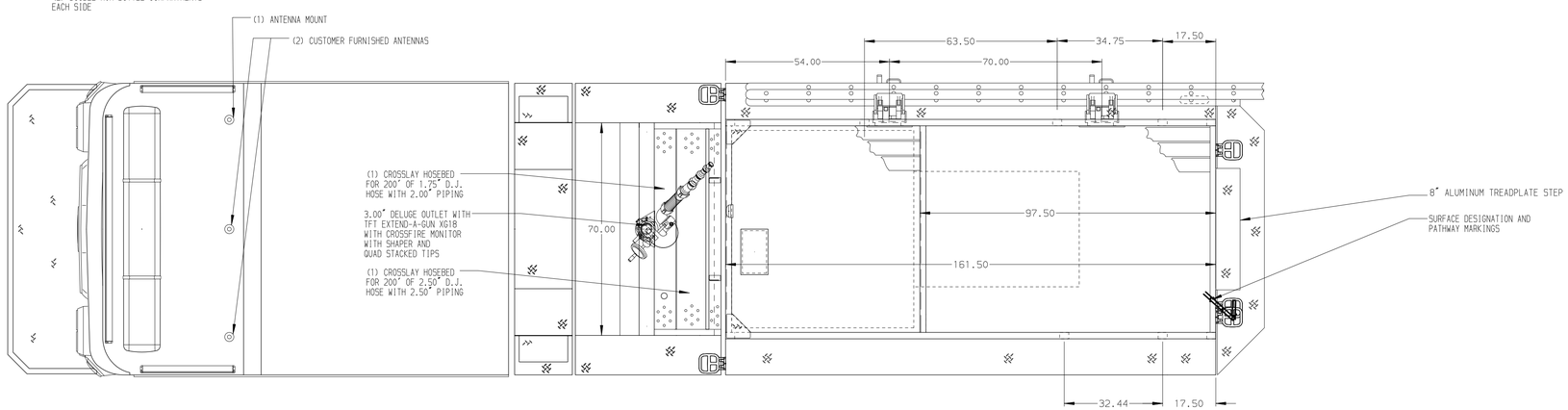


HOSEBED CAPACITIES

1. 200' OF 1.75" D.J. POLY HOSE
2. 1000' OF 5.00" D.J. POLY HOSE
3. 500' OF 3.00" D.J. POLY HOSE
4. 500' OF 3.00" D.J. POLY HOSE
5. 200' OF 1.75" D.J. POLY HOSE

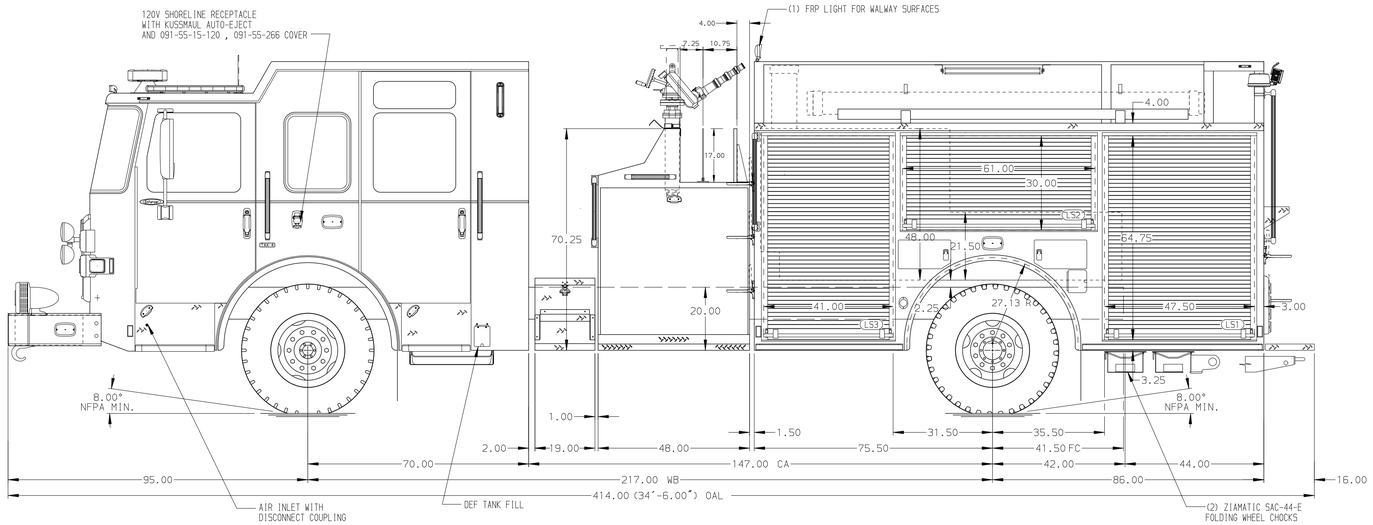


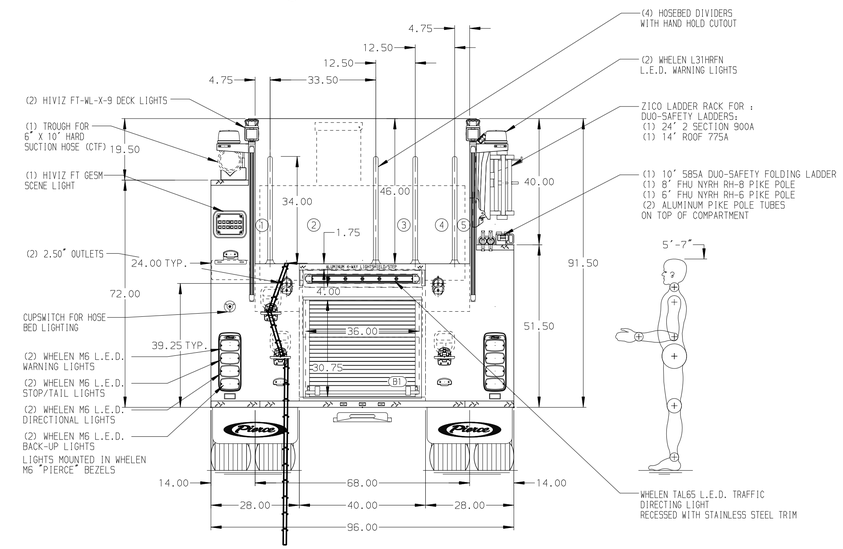


ALUMINUM BODY

SIDE ROLL AND FRONTAL IMPACT PROTECTION

NOTE

DIMENSIONS SHOWN ARE APPROXIMATE AND ARE SUBJECT TO MINOR DEVIATIONS AS MAY OCCUR OR BE NECESSARY IN CONSTRUCTION.
MINOR DETAILS NOT SHOWN.

1. BATTERY CHARGER LOCATED BEHIND DRIVER SEAT
2. DUAL L.E.D. LIGHT STRIPS LOCATED IN HOSE BED

| REV | DATE | BY | CH |
|---|---|---|---|
| 1 | 25FEB25 | LST | TDC |
| 2 | 18NOV24 | LST | TDC |
| 3 | 15OCT24 | LST | TDC |

CHASSIS DATA
MAKE: PIERCE
MODEL: ENFORCER

Pierce MANUFACTURING INC.

TITLE: 1500 GPM, 750 GAL WATERTANK
161" BODY, HARD WIRED

FOR: CRAWFORDSVILLE FIRE DEPARTMENT
CRAWFORDSVILLE, INDIANA

DWG NO. 39527AD

| JOB NO. | 39527 |
|---|---|
| SCALE | 1:24 |
| DATE | |
| DRAWN BY | LST 09JUL24 |
| CHECKED BY | EGO 23JUL24 |
| SHEET SIZE | D |
| SHEET NO. | 1 OF 1 |

View File Created 25-FEB-2025 13:26:48