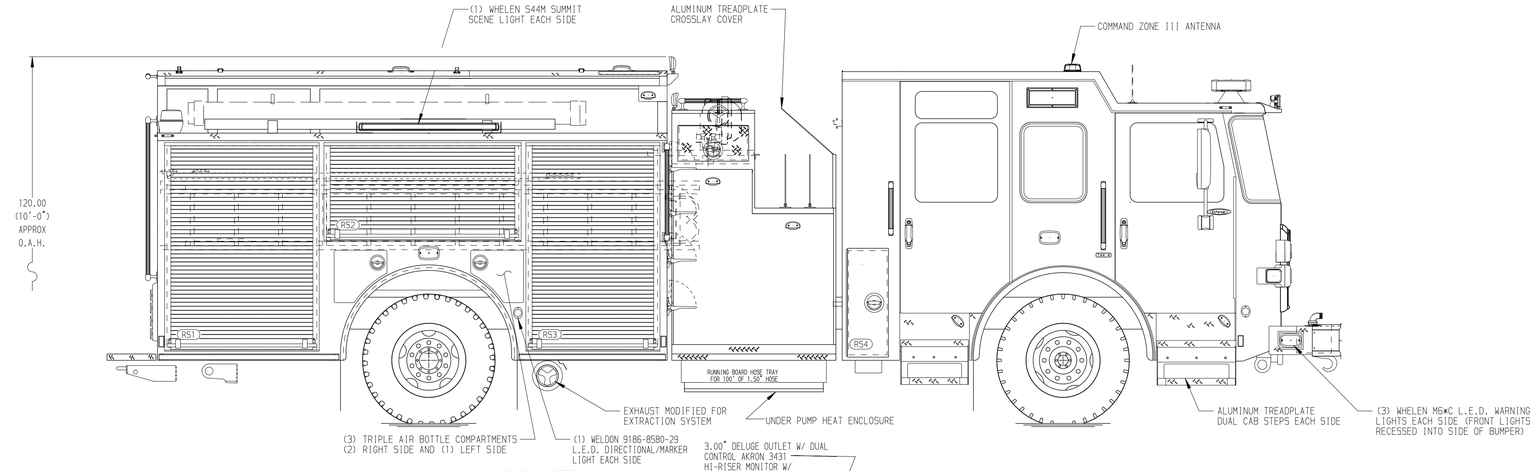

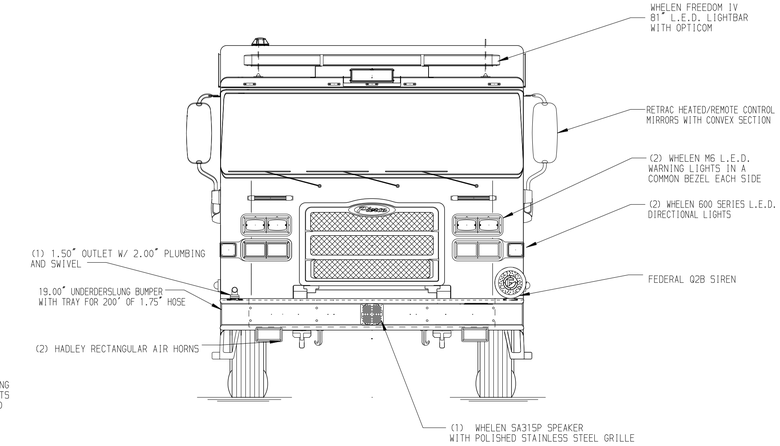

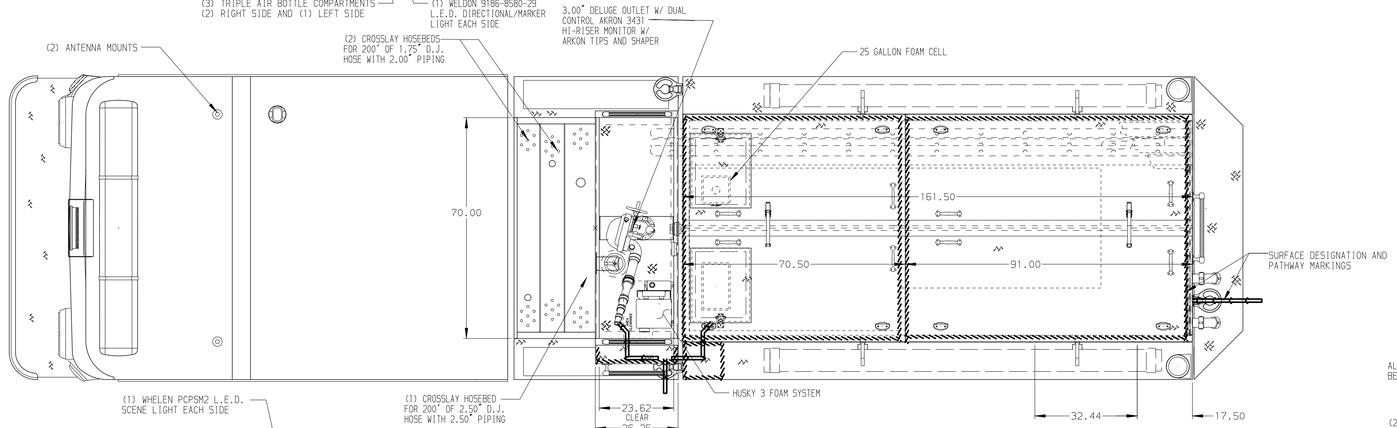

HOSEBED CAPACITIES

1. - 325' OF 1.75" D.J. HOSE
2. - 225' OF 2.50" D.J. HOSE
3. - 500' OF 2.50" D.J. HOSE
4. -1600' OF 4.00" L.D.H. HOSE

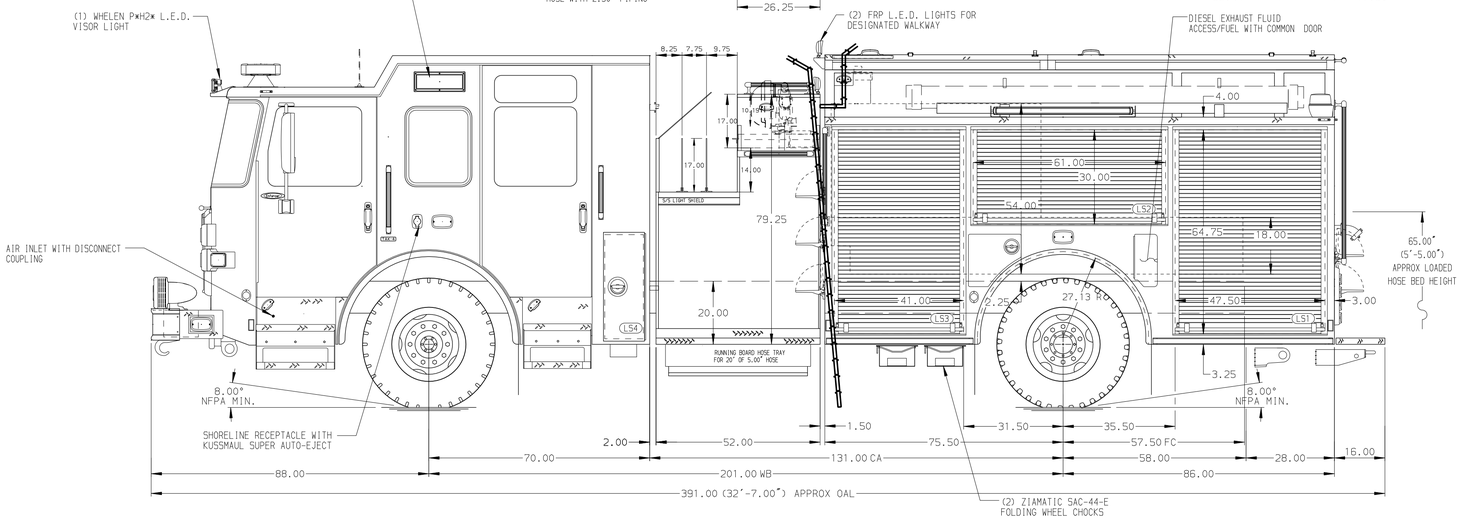

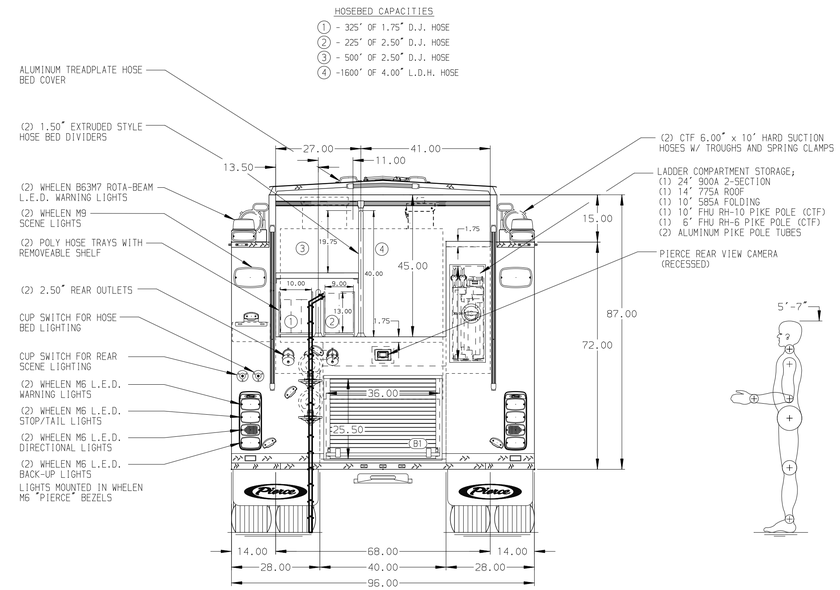

ALUMINUM BODY

SIDE ROLL AND FRONTAL IMPACT PROTECTION

NOTE

DIMENSIONS SHOWN ARE APPROXIMATE AND ARE SUBJECT TO MINOR DEVIATIONS AS MAY OCCUR OR BE NECESSARY IN CONSTRUCTION.
MINOR DETAILS NOT SHOWN.

1. BATTERY CHARGER INDICATOR ON DRIVER'S SEAT RISER

REV	DATE	BY	CH
7	27JUN25	LST	SJS
6	11FEB25	LST	SJS
5	07JAN25	LST	SJS
4	07NOV24	LST	SJS

CHASSIS DATA
MAKE: PIERCE
MODEL: ENFORCER

Pierce MANUFACTURING INC.

TITLE: 1500 GPM, 775 G TANK, 750 G WATER, 25 G FOAM CELL 161" BODY, MUX
FOR: LEWISTON FIRE DEPARTMENT LEWISTON, MAINE
DWG NO. 39538AD-SH1

JOB NO. 39538
SCALE 1:24
DATE
DRAWN BY LST 29OCT24
CHECKED BY SJS 29OCT24
SHEET SIZE D
SHEET NO. 1 OF 2

View File Created 27-JUN-2025 10:40:31