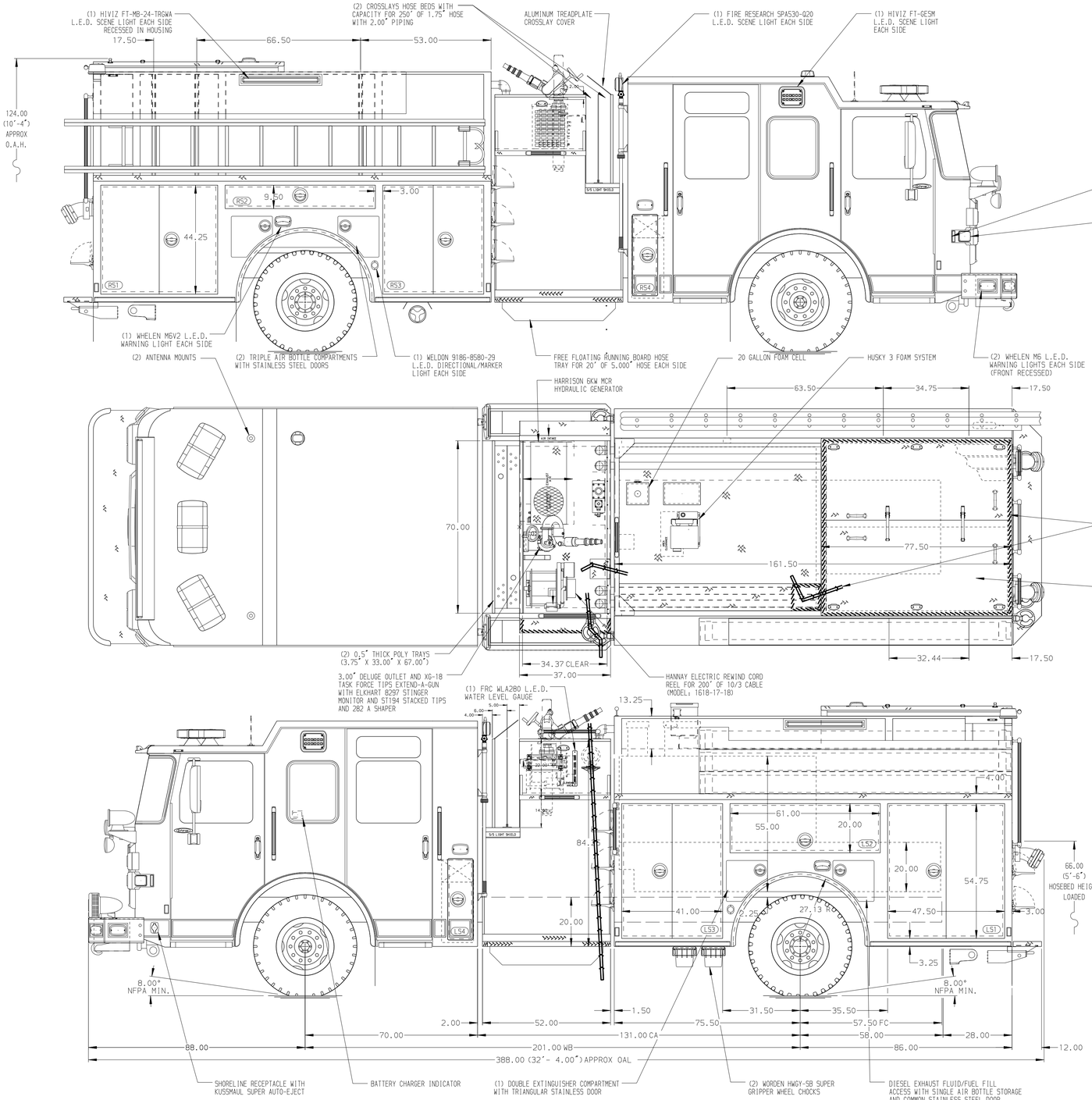


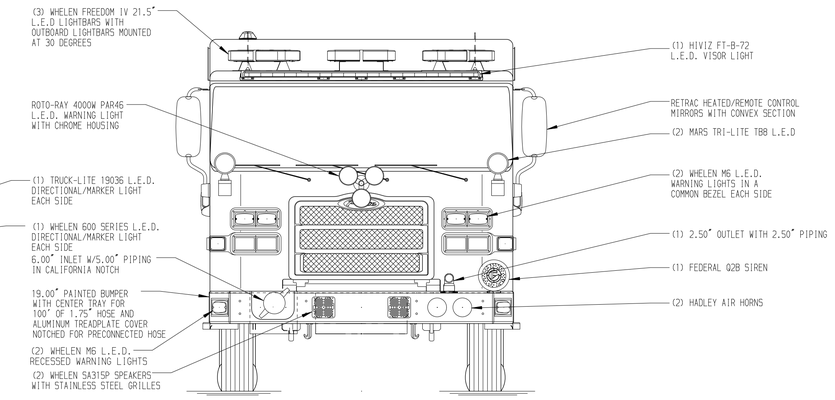


HOSEBED CAPACITIES

1. 250' OF 2.50" D.J. HOSE
2. 250' OF 1.75" D.J. HOSE
3. 1300' OF 5.00" L.D.H. HOSE
4. 500' OF 3.00" D.J. HOSE
5. 250' OF 1.75" D.J. HOSE
6. 250' OF 3.00" D.J. HOSE

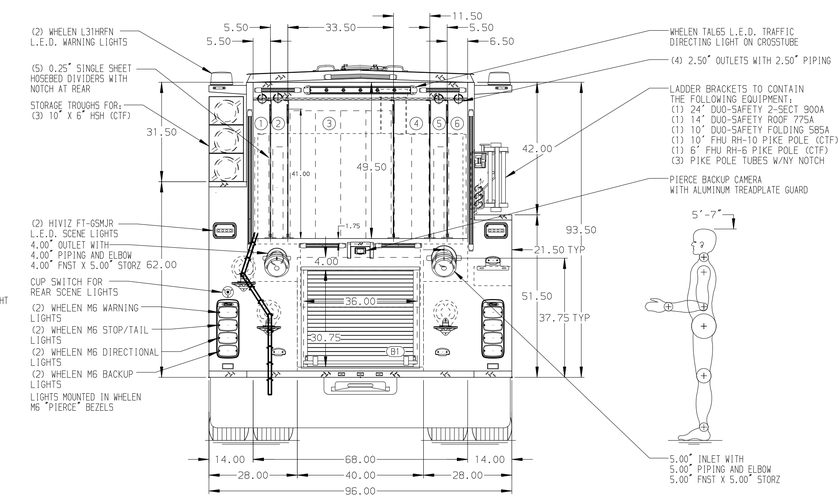


ALUMINUM BODY

NOTE

DIMENSIONS SHOWN ARE APPROXIMATE AND ARE SUBJECT TO MINOR DEVIATIONS AS MAY OCCUR OR BE NECESSARY IN CONSTRUCTION.
MINOR DETAILS NOT SHOWN.

1. ONSPOT AUTOMATIC TIRE CHAINS TO BE PROVIDED AT REAR
2. AIR INLET WITH DISCONNECT COUPLING LOCATED IN DS STEP WELL
3. BATTERY CHARGER LOCATED BEHIND DRIVER'S SEAT
4. 12V L.E.D. LIGHT STRIPS ON HOSE BED COVER
5. CIRCUIT BREAKER PANEL IN COMPARTMENT LS3
6. 120V DUPLEX RECEPTACLE LOCATED IN LS3
7. 120V RECEPTACLE LOCATED ON FORWARD BULKHEAD OF BODY EACH SIDE
8. TWO 120V RECEPTACLES LOCATED IN CAB

| REV | DATE | BY | CH |
|---|---|---|---|
| 7 | 06FEB25 | KLE | SJS |
| 6 | 13JAN25 | KLE | SJS |
| 5 | 09JAN25 | KLE | SJS |
| 4 | 11NOV24 | KLE | WKL |

CHASSIS DATA
MAKE: PIERCE
MODEL: ENFORCER

Pierce MANUFACTURING INC.

TITLE: 1750GPM, 1020G TANK, 1000G WATER, 20G FOAM 161" 2G PUMPER, MUX
FOR: MILL CREEK BOROUGH VOLUNTEER FIRE COMPANY INC MILL CREEK, PENNSYLVANIA
DWG NO.: 39550AD

| | |
|---|---|
| JOB NO. | 39550 |
| SCALE | 1:24 |
| DATE | |
| DRAWN BY | KLE 25OCT24 |
| CHECKED BY | WKL 01NOV24 |
| SHEET SIZE | D |
| SHEET NO. | 1 OF 1 |

View File Created 06-FEB-2025 10:52:00