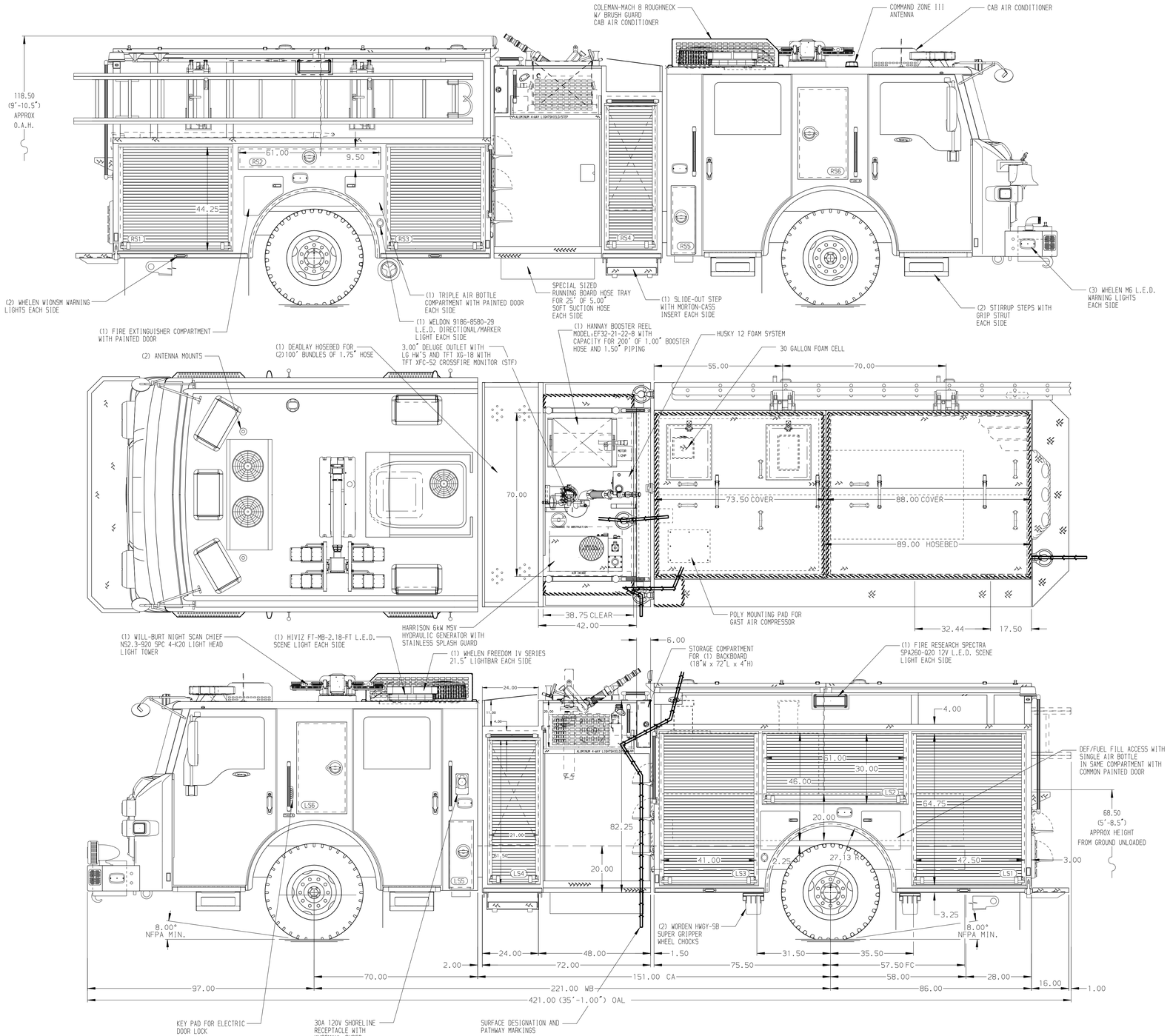

ALUMINUM BODY

SIDE ROLL AND FRONTAL IMPACT PROTECTION

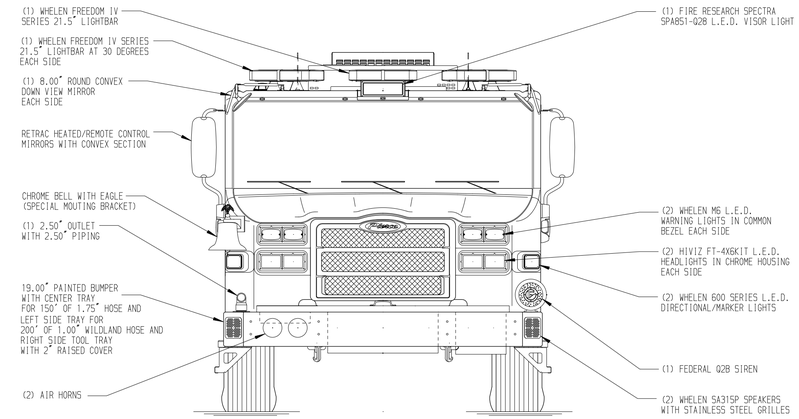

HOSEBED CAPACITIES

1. - 200' OF 2.50" HOSE
2. - 200' OF 2.50" HOSE
3. - 300' OF 1.75" HOSE WITH ALUM TRAY (76"L X 4.25"W X 21"H) - PER CUSTOMER
4. - 1000' OF 5.00" HOSE
5. - 550' OF 3.00" HOSE
6. - 300' OF 1.75" HOSE WITH ALUM TRAY (76"L X 4.25"W X 21"H) - PER CUSTOMER
7. - 250' OF 2.50" HOSE

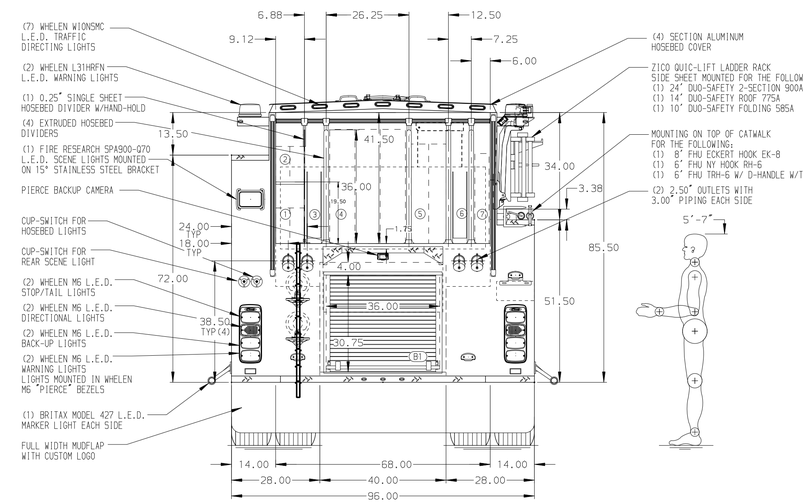

NOTE

DIMENSIONS SHOWN ARE APPROXIMATE AND ARE SUBJECT TO MINOR DEVIATIONS AS MAY OCCUR OR BE NECESSARY IN CONSTRUCTION.
MINOR DETAILS NOT SHOWN.

1. BATTERY CHARGER LOCATED IN COMPARTMENT PER ORDER
2. BATTERY CHARGER INDICATOR LOCATED IN DS STEP AREA
3. DRIP PAN GUARD ON ALL ROLL-UP DOOR COMPARTMENTS
4. CIRCUIT BREAKER PANEL WITH GUARD LOCATED PER ORDER
5. CIRCUIT BREAKER BOX RECESSED PER ORDER
6. SUB-FEED CIRCUIT BREAKER PANEL LOCATED PER ORDER
7. TWO 15/20A 120V RECEPTACLES LOCATED PER ORDER

REV	DATE	BY	CH
B	28FEB25	BTH	DTH
A	09JAN25	BTH	WKL

CHASSIS DATA
MAKE: PIERCE
MODEL: VELOCITY

Pierce MANUFACTURING INC.

TITLE: 1500GPM, 780G TANK, 750G WATER, 30G FOAM 161" PUMPER, VELOCITY ESP
FOR: GEORGETOWN FIRE DEPARTMENT GEORGETOWN, TEXAS
DWG NO.: 39558AD

JOB NO.	39558
SCALE	1:24
DATE	
DRAWN BY	BTH 03JAN25
CHECKED BY	WKL 03JAN25
SHEET SIZE	D
SHEET NO.	1 OF 1

View File Created 10-APR-2025 10:15:36