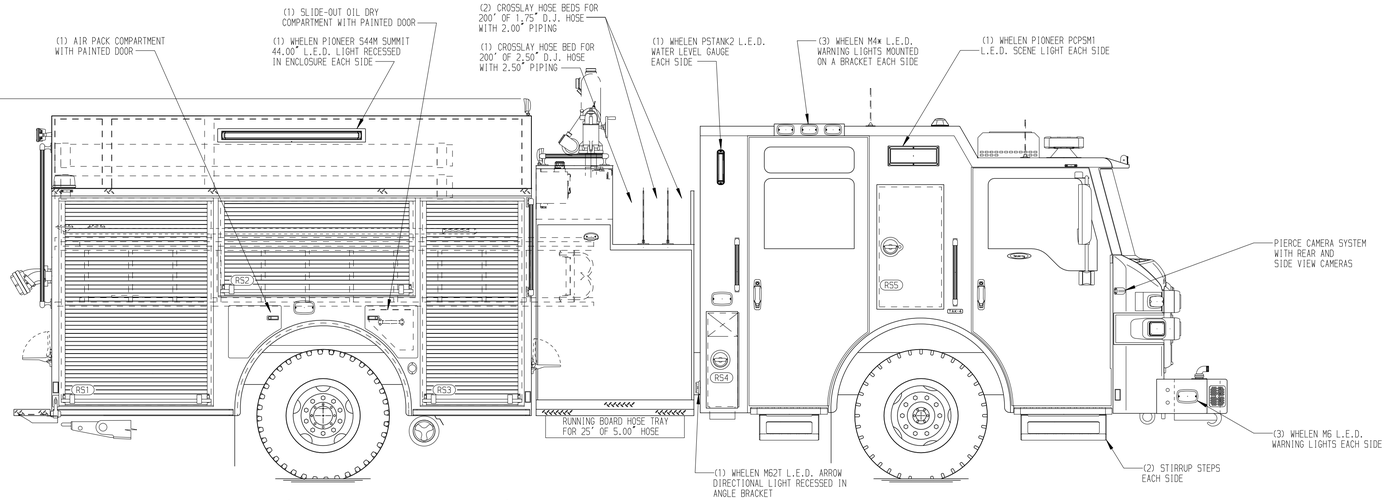

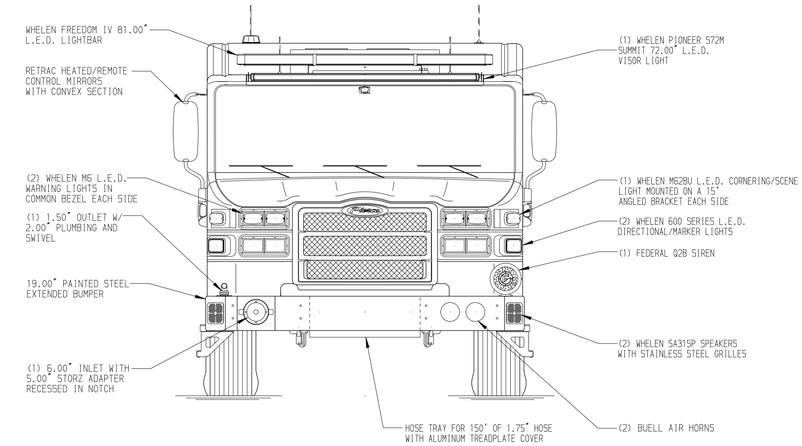

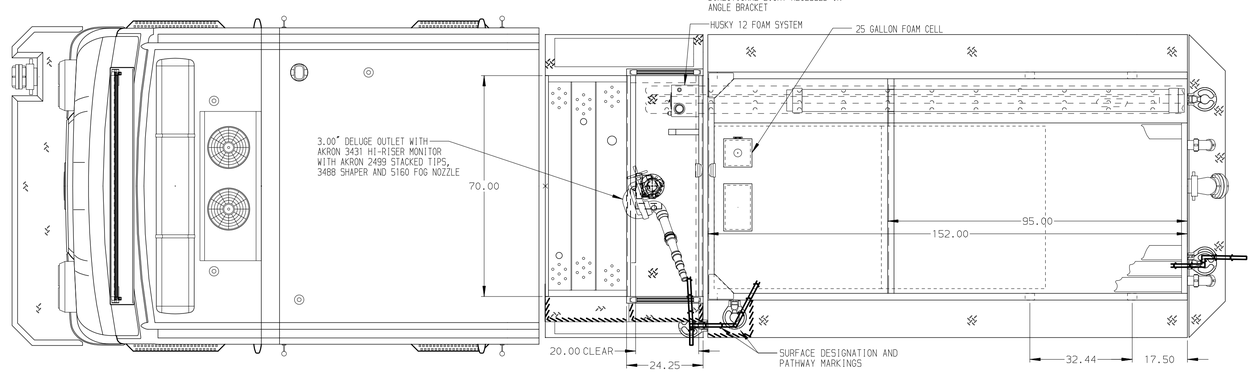

HOSEBED CAPACITIES

1. 400' OF 2.50" D.J. POLY HOSE
2. 1000' OF 5.00" D.J. POLY HOSE
3. 600' OF 2.50" D.J. POLY HOSE

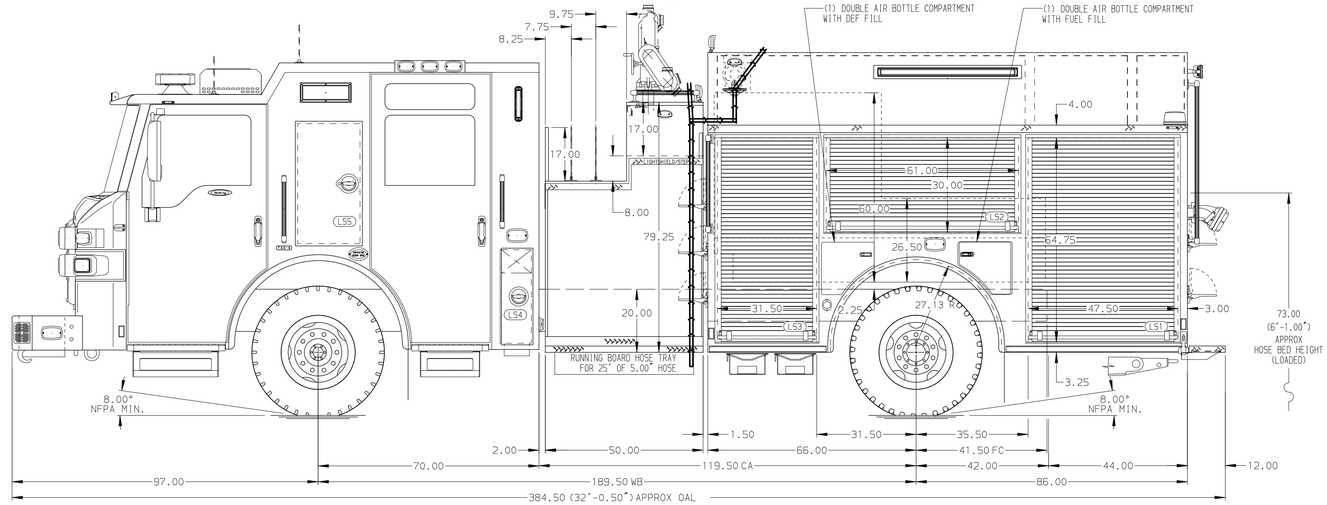

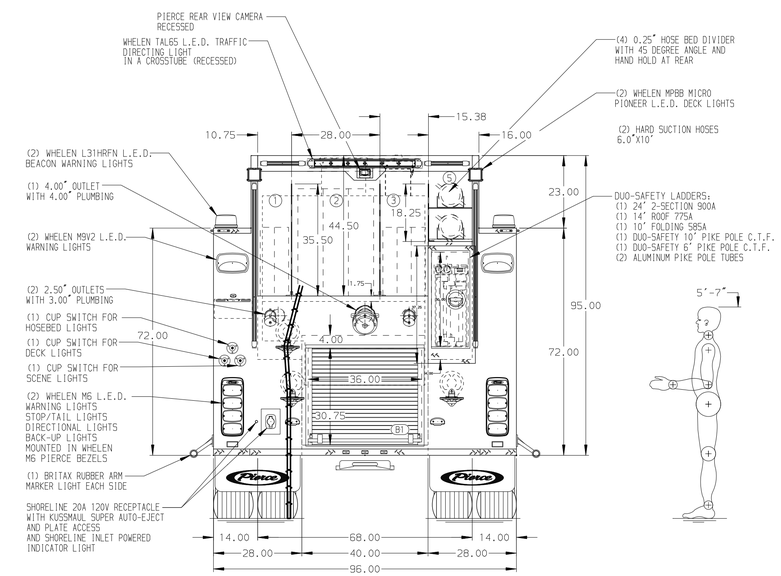

ALUMINUM BODY

SIDE ROLL AND FRONTAL IMPACT PROTECTION

NOTE

DIMENSIONS SHOWN ARE APPROXIMATE AND ARE SUBJECT TO MINOR DEVIATIONS AS MAY OCCUR OR BE NECESSARY IN CONSTRUCTION.
MINOR DETAILS NOT SHOWN.

1. AIR INLET WITH DISCONNECT COUPLING, DRIVER SIDE PUMP PANEL
2. BATTERY CHARGER, KUSSMAUL CHIEF, LOCATED BEHIND DRIVER'S SEAT
3. BATTERY CHARGE INDICATOR LOCATED ON DRIVER SEAT WITH BRACKET
4. SHORELINE 20A KUSSMAUL SUPER AUTO EJECT 09-55-20-120 LOCATED ON DRIVER SIDE REAR BULKHEAD WITH SHORLINE INLET POWERED GREEN INDICATOR LIGHT
5. CIRCUIT BREAKER PANEL IN LS3 LEFT WALL LOW
6. (2) ZIAMATIC SAC-44-E FOLDING WHEEL CHOCKS

REV	DATE	BY	CH
V	27AUG25	BTH	JKR
V	23JUL25	BTH	JKR
E	08MAY25	LST	JKR
D	21APR25	BTH	JKR
V	24MAR25	BTH	JLL

CHASSIS DATA — MAKE: PIERCE — MODEL: VELOCITY FR

Pierce MANUFACTURING INC.

TITLE: 2000GPM, 750G TANK, 725G WATER, 25G FOAM 152" PUMPER, MUX

FOR: SEDGWICK COUNTY FIRE DISTRICT #1 PARK CITY, KANSAS

DWG NO.: 39563AD

JOB NO.	39563
SCALE 1:24	DATE
DRAWN BY SDR	09DEC24
CHECKED BY KLH	09DEC24
SHEET SIZE D	SHEET NO. 1 OF 1

View File Created 27-AUG-2025 10:11:40