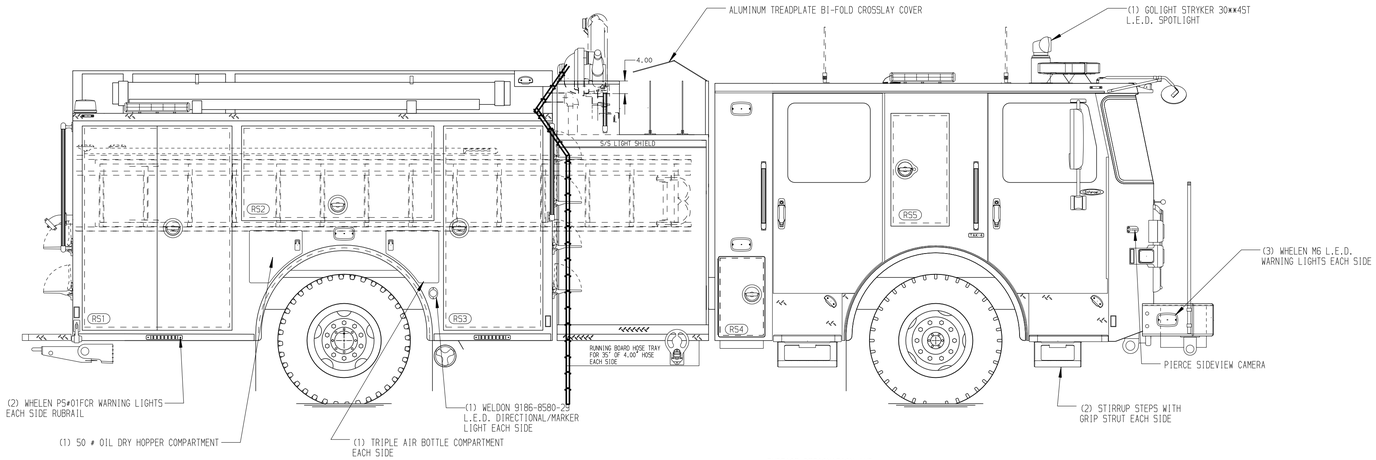

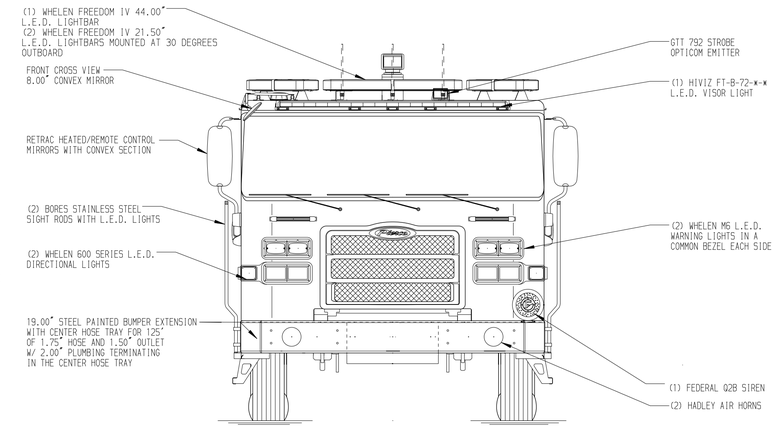

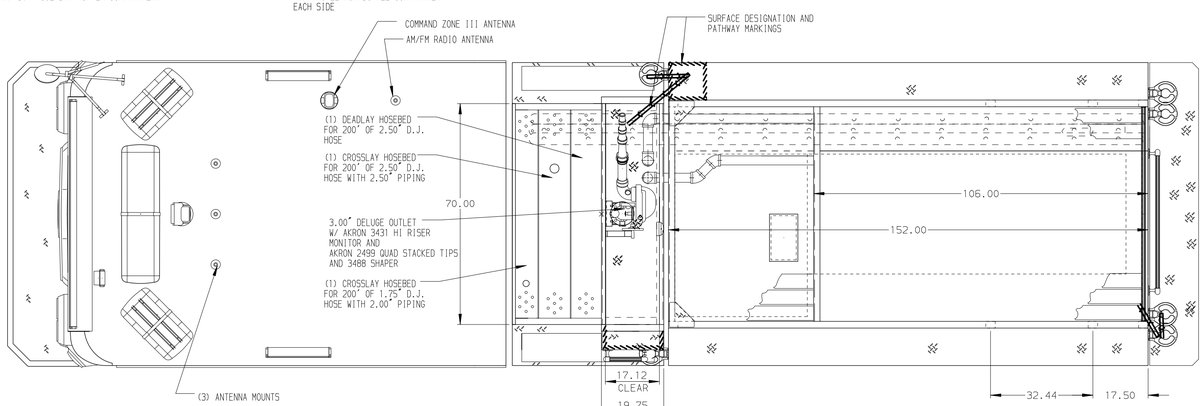

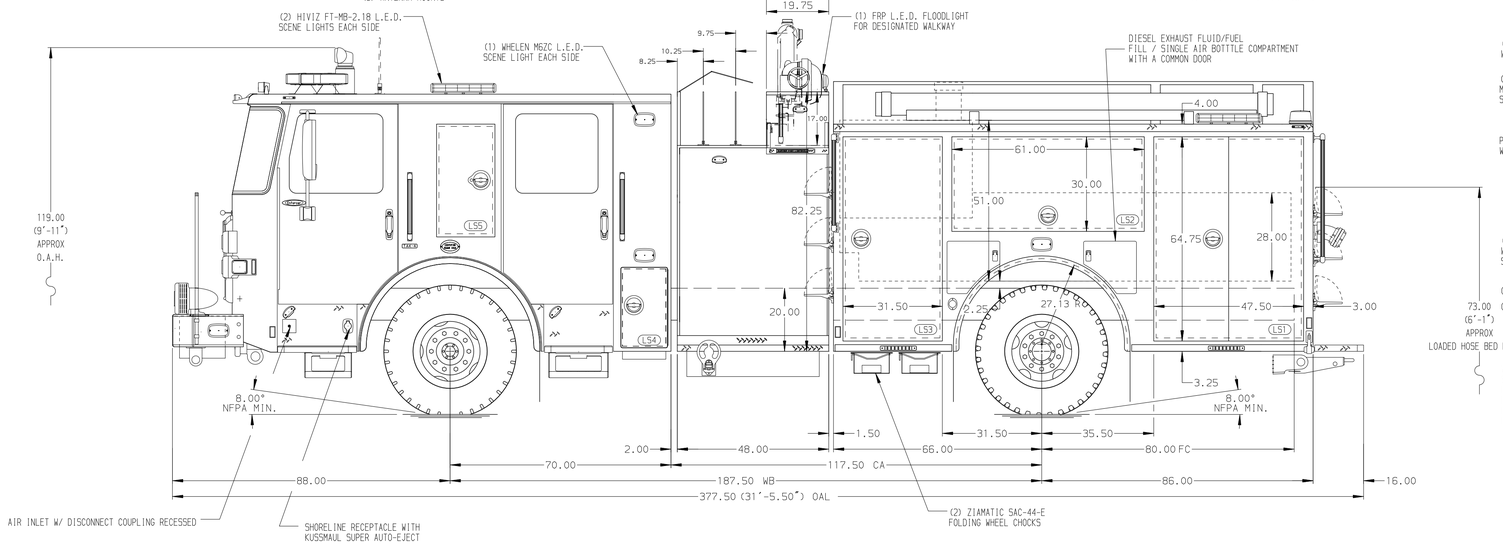

HOSEBED CAPACITIES

1 - 1000' OF 4.00" HOSE
2 - 500' OF 2.50" HOSE
3 - 300' OF 2.50" HOSE
4 - 300' OF 1.75" HOSE

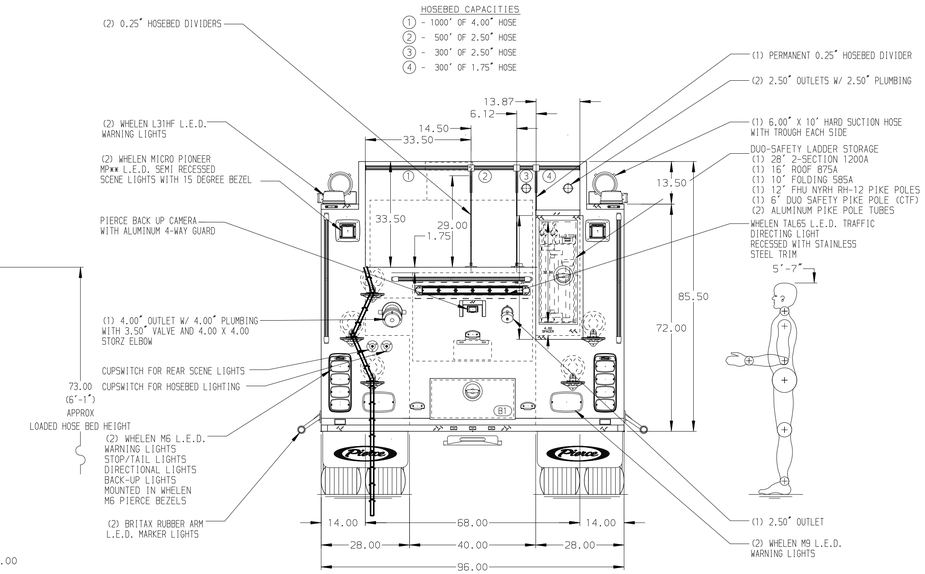

ALUMINUM BODY

SIDE ROLL AND FRONTAL IMPACT PROTECTION

NOTE

DIMENSIONS SHOWN ARE APPROXIMATE AND ARE SUBJECT TO MINOR DEVIATIONS AS MAY OCCUR OR BE NECESSARY IN CONSTRUCTION.
MINOR DETAILS NOT SHOWN.

1. BATTERY CHARGER LOCATED IN LS3
2. BATTERY CHARGER INDICATOR LOCATED ON DRIVER'S SEAT RISER

REV	DATE	BY	CH
F	27AUG25	LST	SJS
E	15AUG25	LST	SJS
D	25MAR25	LST	SJS
C	24FEB25	LST	SJS
B	19FEB25	LST	SJS

CHASSIS DATA
MAKE: PIERCE
MODEL: ENFORCER

Pierce MANUFACTURING INC.

TITLE: 1500 GPM, 750 GAL WATERTANK 152" BODY, MUX
FOR: LINCOLNSHIRE-RIVERWOODS F.P.D. LINCOLNSHIRE, ILLINOIS
DWG NO.: 39575AD

JOB NO. 39575
SCALE 1:24
DATE
DRAWN BY LST 13DEC24
CHECKED BY EGO 18DEC24
SHEET SIZE D
SHEET NO. 1 OF 1

View File Created 27-AUG-2025 10:19:10